DEPARTMENT OF THE NAVY
NAVAL SEA SYSTEMS COMMAND
2531 JEFFERSON DAVIS HWY
ARLINGTON VA 22242-5160

IN REPLY REFER TO

5600
Ser N715/521
5 May 00

From: Commander, Naval Sea Systems Command

Subj: NAVSEA SG420-AP-MMA-010, SECOND REVISION, PERIODIC TESTING ARRANGEMENTS FOR ORDNANCE HANDLING EQUIPMENT

Ref: (a) NAVSEA SG420-AP-MMA-010 of 1 February 1990

Encl: (1) Abstract of Significant Changes

1. This letter officially issues NAVSEA SG420-AP-MMA-010, Second Revision, which supersedes reference (a). Reference (a) should be destroyed.

2. The subject manual has been updated to provide the user with current information, safety regulations and precautions regarding approved ordnance handling equipment. It will be distributed only in CD ROM format. Changes in this revision are provided in enclosure (1).

3. Users are encouraged to submit feedback regarding any incomplete or incorrect information and recommendations for improvement using the Technical Manual Deficiency/Evaluation Report (TMDER) process, which can now be submitted electronically through the Internet.

4. The Naval Ordnance Safety and Security Activity point of contact is CDR Tom Brady, N715, DSN 354-6080 ext. 114, commercial (301) 744-6080 ext. 114 or email: bradyth@navsea.navy.mil.

M. G. MATHIS
By direction

Distribution:
NAVSURFWARCENDIV Indian Head Det Earle DL 185

ABSTRACT OF SIGNIFICANT CHANGES

1. Changes the Distribution Statement to A "Approved for Public Release". (Ref: NAVSURFWARCEN Det Earle ltr 8000 Ser 715/0582 of 2 Dec 99 seeking concurrence from Program Offices to reassign distribution statement. No objections were received to the reassignment.)

2. Deletes the following test fixtures and test arrangements:

a. Beam, Target Detecting Device (TDD) Mk 62 Mod 0 Test Fixture,

b. Fixture, Tilt Mk 23 Mod 0 Test Fixture,

c. Beam, Booster Handling Mk 26 Mod 0,

d. Beam, Hoisting Container Mk 28 Mod 0,

e. Beam, Lift Guided Missile Mk 42 Mod 0,

f. Carrier, Warhead Mk 41 Mod 0,

g. Fixture, Tilt Mk 23 Mod 0

3. Adds the following test fixture and test arrangements:

a. Submarine Launched Mobile Mine (SLMM) Test Fixture,

b. Adapter, Eyebolt (MMC 1B00509),

c. Adapter, Eyebolt (MMC 1B00513),

d. Sling, Oxidant Tank/Condenser Lifting,

e. Sling, Mk 165 Mod 1,

f. Sling, Mk 176 Mod 0,

g. Device, Lifting Battery (MMC 1D00011),

h. Device, Lifting Tailcone (MMC 1D00012),

i. Strongback, Vertical Assembly Mk 6 Mod 0

j. Stand, Assembly Mk 124 Mod 0,

k. Tool, Pullet Motor MMC 7P00005),

l. Harness, Assembly Torpedo Mounted Dispenser,

m. Harness, Assembly Container Mk 594

3. Revises the format of Addendum B "Operator Certification Requirements Chart" in Appendix A.

This page left intentionally blank

SECOND REVISION

PERIODIC TESTING ARRANGEMENTS FOR ORDNANCE HANDLING EQUIPMENT

DISTRIBUTION STATEMENT A
Approved for Public Release; Distribution is Unlimited

THIS PUBLICATION SUPERSEDES NAVSEA SG420-AP-MMA-010 FIRST REVISION DATED 1 FEBRUARY 1990.

PUBLISHED BY DIRECTION OF COMMANDER, NAVAL SEA SYSTEMS COMMAND

This page left intentionally blank

SECOND REVISION

PERIODIC TESTING ARRANGEMENTS FOR ORDNANCE HANDLING EQUIPMENT

DISTRIBUTION STATEMENT A
Approved for Public Release; Distribution is Unlimited

THIS PUBLICATION SUPERSEDES NAVSEA SG420-AP-MMA-010 FIRST REVISION DATED 1 FEBRUARY 1990.

PUBLISHED BY DIRECTION OF COMMANDER, NAVAL SEA SYSTEMS COMMAND

1 APRIL 2000

Reproduction for nonmilitary use of the information or illustrations contained in this publication is not permitted. The policy for military use reproduction is established for the Army in AR 380-5, for the Navy and Marine Corps in OPNAVINST 5510.1 series, and for the Air Force in Regulations 205-1.

LIST OF EFFECTIVE PAGES

Total number of pages in this manual is 300 consisting of the following:

Page No.	*Change No.
Title/A	0
Change Record-1/	
Change Record-2 Blank	0
Foreword-1/(Foreword-2 Blank)	0
i thru viii	0
ix/(x Blank)	0
1-1/(1-2 Blank)	0
2-1 thru 2-6	0
3-1 thru 3-30	0
3-31/(3-32 Blank)	0
4-1 thru 4-228	0
4-229/(4-230 Blank)	0
A-1 thru A-20	0
A-21/(A-22 Blank)	0

Date of Issue for Original and Changed Pages is:

Original 0 - 1 April 2000

*Zero in this column indicates an original page.

NAVSEA TECHNICAL MANUAL CERTIFICATION SHEET

CERTIFICATION APPLIES TO: NEW MANUAL ___ REVISION 2 CHANGE ___

APPLICABLE TMINS/PUB NO.: NAVSEA SG 420-AP-MMA-010

PUBLICATION DATE (MO, DA, YR): 1 APRIL 2000

READING GRADE LEVEL (RGL): ___

TITLE: PERIODIC TESTING ARRANGEMENTS FOR ORDNANCE HANDLING EQUIPMENT

TMCR/TMSR/SPECIFICATION NO.: ___

CHANGES AND REVISIONS:

PURPOSE: ___

EQUIPMENT ALTERATION NUMBERS INCORPORATED: ___

TMDER/ACN NUMBERS INCORPORATED: ___

CONTINUE ON REVERSE SIDE OR ADD PAGES AS NEEDED

CERTIFICATION STATEMENT

THIS IS TO CERTIFY THAT RESPONSIBLE NAVSEA ACTIVITIES HAVE REVIEWED THE ABOVE IDENTIFIED DOCUMENT FOR ACQUISITION COMPLIANCE, TECHNICAL COVERAGE, AND PRINTING QUALITY. THIS FORM IS FOR INTERNAL NAVSEA MANAGEMENT USE ONLY, AND DOES NOT IMPLY CONTRACTUAL APPROVAL OR ACCEPTANCE OF THE TECHNICAL MANUAL BY THE GOVERNMENT, NOR RELIEVE THE CONTRACTOR OF ANY RESPONSIBILITY FOR DELIVERING THE TECHNICAL MANUAL IN ACCORDANCE WITH THE CONTRACT REQUIREMENT.

AUTHORITY	NAME	SIGNATURE	ORGANIZATION	CODE	DATE
ACQUISITION	K. H. ZIMMS	K. H. Z	PHST CENTER NAVAL SURFACE WARFARE CENTER INDIAN HEAD DIVISION DET EARLE COLTS NECK, NJ	71	3/30/00
TECHNICAL	A. V. STANTON	A. V. Stanton	PHST CENTER NAVAL SURFACE WARFARE CENTER INDIAN HEAD DIVISION DET EARLE COLTS NECK, NJ	715	3/29/00
PRINTING RELEASE	J. COINER	J. Coiner	PHST CENTER NAVAL SURFACE WARFARE CENTER INDIAN HEAD DIVISION DET EARLE COLTS NECK, NJ	715JC	3/29/00

This page left intentionally blank

RECORD OF CHANGES

CHANGE NO.	DATE	TITLE OR BRIEF DESCRIPTION	ENTERED BY

This page left intentionally blank

FOREWORD

Ships, training activities, supply points, depots, Naval shipyards, and supervisors of shipbuilding are requested to arrange for the maximum practical use and evaluation of NAVSEA technical manuals. All errors, omissions, discrepancies, and suggestions for improvement to NAVSEA technical manuals shall be reported to the Commander, Naval Surface Warfare Center (Code 5E31), 4363 Missile Way, Port Hueneme, CA 93043-4307 on NAVSEA Technical Manual Deficiency/Evaluation Report (TMDER), NAVSEA Form 4160/1. A copy of NAVSEA TMDER Form 4160/1 is included at the end of this publication. For activities with internet access, this form may also be completed and processed using NSWC/PHD website: http://nsdsa.nswses.navy.mil/tmder/tmder.htm. All feedback comments shall be thoroughly investigated and originators will be advised of TMDER resolution.

This publication supersedes NAVSEA SG420-AP-MMA-010 dated 1 February 1990 which should be destroyed.

This page left intentionally blank

TABLE OF CONTENTS

Chapter/Paragraph/Section		Page
List of Figures		**iii**
List of Tables		**ix**
Safety Summary		**x**
1	**INTRODUCTION**	**1-1**
1-1.	Purpose	1-1
1-2.	Scope	1-1
1-3.	Organization of Manual	1-1
1-4.	Date of Publication	1-1
2	**PERIODIC TESTING OF ORDNANCE HANDLING EQUIPMENT**	**2-1**
2-1.	General	2-1
2-2.	Weight Testing	2-1
2-3.	Principle Hazards	2-1
2-4.	Personal Safety Requirements	2-2
2-5.	General Safety Precautions	2-2
2-5.1.	Precautions Before Testing.	2-3
2-5.2.	Precautions During Testing.	2-4
2-5.3.	Precautions After Testing.	2-4
2-6.	Marking Defective Handling Equipment	2-4
2-7.	Marking Safe Handling Equipment	2-4
3	**TEST EQUIPMENT.**	**3-1**
3-1.	General	3-1
3-2.	Description	3-1
3-2.1.	Tiedown Base and Associated Hardware.	3-1
3-2.2.	Hoisting Equipment.	3-2
3-2.3.	Load Application Equipment.	3-2
3-2.4.	Instruments to Measure Applied Loads.	3-3
3-2.5.	Test Fixtures.	3-3
3-2.5.1.	Adapter, Lifting, CLS Tomahawk, Test Plate.	3-4
3-2.5.2.	Adapter, Weight Test, BSS Lifting Fixture.	3-5
3-2.5.3.	Adapter, Weight Test, Boiler Lifting Fixture.	3-6
3-2.5.4.	Adapter, Weight Test, Oxidant Tank/Condenser Lifting Fixture.	3-7
3-2.5.5.	Adapter, Weight Test, Gas Generator Lifting Tool.	3-8
3-2.5.6.	Adapter, Sill Lift Mk 166 Mod 0 Test Fixture.	3-9
3-2.5.7.	Beam, Hoisting, Mk 4 Mod 2, Mk 5 Mod 2 Test Fixture.	3-10
3-2.5.8.	Beam, Lift Mk 32 Through 38 Mod 0, Mk 37 Mod 1 Test Fixture	3-11
3-2.5.9.	Beam, Canister, Adapter Lift Mk 50 Mod 0 Test Fixture.	3-12
3-2.5.10.	Beam, Vertical Launch ASROC (VLA) Missile Hoisting, Mk 51 Mod 0 Test Fixture.	3-13
3-2.5.11.	Beam, Dual Thrust Rocket Motor (DTRM) Mk 61 Mod 0 Test Fixture.	3-14

Chapter/Paragraph/Section **Page**

3-2.5.12. Multiple Beam Test Fixture. 3-15
3-2.5.13. Carrier, Spider Mk 60 And Mk 61 Mod 0 Test Fixture. 3-16
3-2.5.14. Dolly, Mk 6 And Mk 30 Mods Stream Adapter Test Fixture. 3-17
3-2.5.15. Dolly, Mk 6 And Mk 30 Mods Rail Test Fixture. 3-18
3-2.5.16. Fixture, Tilt Mk 25 Mod 0 Test Fixture. 3-19
3-2.5.17. Fixture, Handling, Lower Airframe Mk 27 Mod 0 Test Fixture. 3-20
3-2.5.18. Fixture, Handling, Upper Airframe Mk 28 Mod 0 Test Fixture. 3-21
3-2.5.19. Fixture, Handling, Thrust Vector Control (TVC) Mk 29 Mod 0 Test Fixture. . . . 3-22
3-2.5.20. Fixture, Test, Multi-Purpose. 3-23
3-2.5.21. Strongback, Horizontal Transfer Assembly Mk 3 Mod 0 Upper Test Fixture. . . . 3-24
3-2.5.22. Strongback, Horizontal Transfer Assembly Mk 3 Mod 0 Lower Test Fixture. . . . 3-25
3-2.5.23. Strongback, Vertical Assembly Mk 4 Mod 0 Test Fixture. 3-26
3-2.5.24. Lifting Device, Gas Generator, JCM 17350 Test Fixture. 3-27
3-2.5.25. SLMM Test Fixture Assembly. 3-28
3-2.5.26. Strongback, Cargo, Stream, Heavy Lift Mk 5 Mod 1 Test Fixture. 3-29
3-3. Test Arrangements 3-30

4 ARRANGEMENTS FOR PERIODIC TESTING OF ORDNANCE HANDLING EQUIPMENT. 4-1

Section I Adapters 4-2
Section II Bands 4-12
Section III Beams 4-16
Section IV Booms 4-66
Section V Carriers 4-72
Section VI Dollies 4-88
Section VII Fixtures 4-96
Section VIII Gantries 4-108
Section IX Slings 4-112
Section X Strongbacks 4-196
Section XI Miscellaneous 4-210

APPENDIX A NAVY PERIODIC WEIGHT TEST CERTIFICATION PROGRAM FOR ORDNANCE HANDLING EQUIPMENT TEST FACILITIES A-1

LIST OF FIGURES

Figure	Title	Page
3-1	Typical Swivel Tiedown Ring	3-2
3-2	CLS TOMAHAWK Lifting Adapter, Test Plate (NWSE 10502)	3-4
3-3	BSS Lifting Fixture Weight Test Adapter (NAVSEA Dwg 6823667-002)	3-5
3-4	Boiler Lifting Fixture Weight Test Adapter (NAVSEA Dwg 6747157)	3-6
3-5	Oxidant Tank/Condenser Lifting Fixture Weight Test Adapter (NAVSEA Dwg 6823667-001)	3-7
3-6	Gas Generator Lifting Tool Weight Test Adapter (NAVSEA Dwg 6747158)	3-8
3-7	Mk 166 Mod 0 Sill Lift Adapter Test Fixture (Dwg. 6213007)	3-9
3-8	Mk 4 Mod 2, Mk 5 Mod 2 Hoisting Beams Test Fixture	3-10
3-9	Mk 32 through 38 Mod 0, Mk 37 Mod 1 Lift Beam Test Fixture (DL 5166534)	3-11
3-10	Mk 50 Mod 0 Beam Canister Lift Adapter Test Fixture (Dwg 6213813)	3-12
3-11	Mk 51 Mod 0 VLA Missile Hoisting Beam Test Fixture (Dwg 6212963)	3-13
3-12	Mk 61 Mod 0 Hoisting DTRM Beam Test Fixture (Dwg 6213842 Aft End and Dwg 6213843 Fwd End)	3-14
3-13	Multiple Beam Test Fixture	3-15
3-14	Mk 60 and Mk 61 Mod 0 Spider Carrier Test Fixture (Dwg 6213000)	3-16
3-15	Mk 6 and Mk 30 Dolly STREAM Adapter Test Fixture (DL 5166612)	3-17
3-16	Mk 6 and Mk 30 Dolly Rail Test Fixture (NWHC 7881)	3-18
3-17	Mk 25 Mod 0 Tilt Fixture Test Fixture (DL 6213559)	3-19
3-18	Mk 27 Mod 0 Lower Airframe Handling Fixture Test Fixture Set (Dwgs 6212950 & 6212951)	3-20
3-19	Mk 28 Mod 0 Upper Airframe Handling Fixture Test Fixture (Dwg 6212956)	3-21
3-20	Mk 29 Mod 0 TVC Handling Fixture Test Fixture (Dwg 6212961)	3-22
3-21	Multi-Purpose Test Fixture (Dwg 6213365)	3-23
3-22	Mk 3 Mod 0 Horizontal Transfer Assembly Strongback Test Fixture (Dwg 6213038)	3-24
3-23	Mk 3 Mod 0 Horizontal Transfer Assembly Strongback Lower Test Fixture (Dwg 6213039)	3-25
3-24	Mk 4 Mod 0 Vertical Assembly Strongback Test Fixture (Dwg 6213003)	3-26
3-25	Gas Generator, Lifting Device Test Fixture (JCM-17769)	3-27
3-26	SLMM Test Fixture Assembly (Dwg 6213302)	3-28
3-27	Strongback, Cargo, STREAM, Heavy Lift Mk 5 Mod 1 Test Fixture	3-29
3-28	Typical Test Arrangement Diagram	3-31
4-1	Test Arrangement, Hook Adapter, Mk 91 Mod 0	4-4
4-2	Test Arrangement, Missile Hoisting Adapter, Mk 151 Mod 0	4-5
4-3	Test arrangement, Sill Lift Adapter, Mk 166 Mod 0	4-6
4-4	Test Arrangement, Adapter, Lifting Assembly, Mk 169 Mod 0	4-7
4-5	Test Arrangement, Adapter, Hook, Mk 176 Mod 0	4-9
4-6	Test Arrangement, Adapter, Eyebolt, (MMC 1B00509)	4-10
4-7	Test Arrangement, Adapter, Eyebolt, (MMC 1B00513)	4-11
4-8	Test Arrangement, Handling Band, Mk 79 Mod 1	4-14
4-9	Test Arrangement, Handling Band, Mk 81 Mod 0	4-15
4-10	Test Arrangement, Hoisting Beam, Mk 4 Mod 2	4-21
4-11	Test Arrangement, Hoisting Beam, Mk 5 Mod 2	4-22
4-12	Test Arrangement, Guided Missile Hoisting, Mk 9 Mod 0	4-23

LIST OF FIGURES (CONTINUED)

Figure	Title	Page
4-13	Test Arrangement, Booster Hoisting Beam, Mk 10 Mod 0	4-24
4-14	Test Arrangement, Guided Missile Hoisting Beam, Mk 15 Mod 2	4-25
4-15	Test Arrangement, Handling Beam, Mk 18 Mod 0	4-26
4-16	Test Arrangement, Handling Beam, Mk 18 Mod 1	4-27
4-17	Test Arrangement, Handling Beam, Mk 19 Mod 1	4-28
4-18	Test Arrangement, Hoisting Beam, Mk 21 Mod 0	4-30
4-19	Test Arrangement, Handling Beam, Mk 22 Mod 0	4-31
4-20	Test Arrangement, Hoisting Beam, Mk 24 Mod 0	4-32
4-21	Test Arrangement, HARPOON Canisters Low Overhead Lift Beam, Mk 30 Mod 0	4-33
4-22	Test Arrangement, HARPOON Canisters Low Overhead Lift Beam, Mk 30 Mod 1	4-34
4-23	Test Arrangement, Hoist Rotation Beam, Mk 31 Mod 1	4-35
4-24	Test Arrangement, Hoist Rotation Beam, Mk 31 Mod 2	4-36
4-25	Test Arrangement, Hoist Rotation Beam, Mk 31 Mod 3	4-37
4-26	Test Arrangement, Lift Beam, Mk 32 Mod 0	4-38
4-27	Test Arrangement, Lift Beam, Mk 33 Mod 0	4-39
4-28	Test Arrangement, Lift Beam, Mk 34 Mod 0	4-40
4-29	Test Arrangement, Lift Beam, Mk 35 Mod 0	4-41
4-30	Test Arrangement, Lift Beam, Mk 36 Mod 0	4-42
4-31	Test Arrangement, Lift Beam, Mk 37 Mod 0	4-43
4-32	Test Arrangement, Lift HARPOON Air Launch Beam, Mk 37 Mod 1 (Sheet 1 of 2)	4-44
4-33	Test Arrangement, Lift Beam, Mk 38 Mod 0	4-46
4-34	Test Arrangement, Lift Beam, Mk 40 Mod 0	4-47
4-35	Test Arrangement, Lift Beam, Mk 41 Mod 0	4-48
4-36	Test Arrangement, Dockside Loading Beam, Mk 43 Mod 0	4-49
4-37	Test Arrangement, Lift Beam, Mk 44 Mod 0	4-50
4-38	Test Arrangement, Encanistered AUR Hoisting Beam, Mk 45 Mod 0	4-51
4-39	Test Arrangement, AUR Container Hoisting Beam, Mk 46 Mod 0	4-52
4-40	Test Arrangement, Container Handling Beam, Mk 49 Mod 0	4-53
4-41	Test Arrangement, Canister Adapter Lift Beam, Mk 50 Mod 0	4-54
4-42	Test Arrangement, Vertical Launch ASROC (VLA) Missile Hoisting Beam, Mk 51 Mod 0	4-55
4-43	Test Arrangement, Container Handling Beam, Mk 52 Mod 0	4-56
4-44	Test Arrangement, Container Handling Beam, Mk 52 Mod 1	4-57
4-45	Test Arrangement, Warhead Lift Beam, Mk 53 Mod 0	4-58
4-46	Test Arrangement, Beam, SLAM Guidance Section, Mk 54 Mod 0	4-59
4-47	Test Arrangement, Beam, Mine Neutralization Vehicle, Mk 56 Mod 0	4-60
4-48	Test Arrangement, Booster Lift Beam, Mk 57 Mod 0	4-61
4-49	Test Arrangement, Upper Stage SM-2 BLK IV Beam, Mk 58 Mod 0	4-62
4-50	Test Arrangement, Guidance Section Beam, Mk 60 Mod 0	4-63
4-51	Test Arrangement, Hoisting DTRM Beam, Mk 61 Mod 0	4-64
4-52	Test Arrangement, Beam, Mk 62 Mod 0	4-65
4-53	Test Arrangement, Forklift Truck Boom, Mk 5 Mod 0	4-68
4-54	Test Arrangement, 16-Inch Powder Tank Carrier, Mk 2 Mod 0	4-74
4-55	Test Arrangement, 16-Inch Projectile Carrier, Mk 3 Mod 4	4-75
4-56	Test Arrangement, 16-Inch Projectile Carrier, Mk 3 Mod 6	4-76
4-57	Test Arrangement, Bomb Carrier, Mk 4 Mod 0	4-77

LIST OF FIGURES (CONTINUED)

Figure	Title	Page
4-58	Test Arrangement, Sustainer Carrier, Mk 34 Mod 1	4-78
4-59	Test Arrangement, Mine Carrier, Mk 46 Mod 1	4-79
4-60	Test Arrangement, Sustainer Carrier, Mk 48 Mod 0	4-80
4-61	Test Arrangement, Weapons Carrier, Mk 51 Mod 1	4-81
4-62	Test Arrangement, Guided Weapon Carrier, MK 52 Mod 1	4-82
4-63	Test Arrangement, 16-Inch Powder Tank Carrier, Mk 54 Mod 1	4-84
4-64	Test Arrangement, Weapon Carrier, Mk 55 Mod 1	4-85
4-65	Test Arrangement, Spider Carrier, Mk 60 Mod 0	4-86
4-66	Test Arrangement, Spider Carrier, Mk 61 Mod 0	4-87
4-67	Test Arrangement, Missile Transfer Dolly, Mk 6 Mod 4	4-90
4-68	Test Arrangement, Missile Transfer Dolly, Mk 30 Mod 0	4-93
4-69	Test Arrangement, BSS Vacuum/Lifting Fixture	4-98
4-70	Test Arrangement, Boiler Lifting Fixture	4-99
4-71	Test Arrangement, Oxidant Tank/Condenser Lifting Fixture	4-100
4-72	Test Arrangement, Warhead Insertion Fixture, MK 15 Mod 1	4-101
4-73	Test Arrangement, Warhead Insertion Fixture, Mk 22 Mod 0	4-102
4-74	Test Arrangement, Tilt Fixture, Mk 25 Mod 0	4-103
4-75	Test Arrangement, Lower Airframe Handling Fixture, Mk 27 Mod 0	4-104
4-76	Test Arrangement, Upper Airframe Handling Fixture, Mk 28 Mod 0	4-105
4-77	Test Arrangement, TVC Handling Fixture, Mk 29 Mod 0	4-106
4-78	Test Arrangement, AUR Loading Gantry, Mk 28 Mod 0	4-110
4-79	Test Arrangement, Oxidant Tank/Condenser Lifting Sling	4-118
4-80	Test Arrangement, Turbine Gearbox Lifting Sling	4-119
4-81	Test Arrangement, Pallet Sling, Mk 70 Mod 2	4-120
4-82	Test Arrangement, Hoisting Sling, Mk 78 Mod 0	4-121
4-83	Test Arrangement, Pallet Sling, Mk 85 Mod 0 (Used for seven swage slings only)	4-122
4-84	Test Arrangement, Pallet Sling, Mk 85 Mod 0 (Used for 11 swage slings only)	4-123
4-85	Test Arrangement, Pallet Sling, Mk 86 Mod 0	4-124
4-86	Test Arrangement, Pallet Sling, MK 87 Mod 0	4-125
4-87	Test Arrangement, Hoisting Sling, Mk 92 Mod 0	4-126
4-88	Test Arrangement, Pallet Sling, Mk 93 Mod 0	4-127
4-89	Test Arrangement, Torpedo Sling, Mk 94 Mod 0	4-128
4-90	Test Arrangement, Torpedo Sling, Mk 95 Mod 0	4-129
4-91	Test Arrangement, Weapons Handling Sling, Mk 99 Mod 0	4-130
4-92	Test Arrangement, Pallet Sling, Mk 100 Mod 1	4-131
4-93	Test Arrangement, Mine Sling, Mk 101 Mod 0	4-132
4-94	Test Arrangement, Torpedo Sling, Mk 102 Mod 0	4-133
4-95	Test Arrangement, Sling, Mk 103 Mod 0	4-134
4-96	Test Arrangement, Sling, Mk 104 Mod 0	4-135
4-97	Test Arrangement, Pendant for Hoisting Sling, Mk 105 Mod 0	4-136
4-98	Test Arrangement, Legs (Color Coded Orange) for Hoisting Sling, Mk 105 Mod 0	4-137
4-99	Test Arrangement, Legs (Color Coded Green) for Hoisting Slings, Mk 105 Mod 0 and Mk 128 Mod 0	4-138
4-100	Test Arrangement, Sling, Mk 106 Mod 0	4-139
4-101	Test Arrangement, Sling, Mk 107 Mod 0	4-140
4-102	Test Arrangement, Sling, Mk 108 Mod 0	4-141

LIST OF FIGURES (CONTINUED)

Figure	Title	Page
4-103	Test Arrangement, Container Lifting Sling, Mk 109 Mod 1	4-142
4-104	Test Arrangement, Sling, Mk 111 Mod 0	4-143
4-105	Test Arrangement, Sling, Mk 113 Mod 0	4-144
4-106	Test Arrangement, Sling, Mk 114 Mod 0	4-145
4-107	Test Arrangement, Weapons Handling Sling, Mk 115 Mod 0	4-146
4-108	Tests Arrangement, Container Sling, Mk 116 Mod 0	4-147
4-109	Test Arrangement, Sling, Mk 117 Mod 0	4-148
4-110	Test Arrangement, Sling, Mk 118 Mod 0	4-149
4-111	Test Arrangement, Sling, Mk 121 Mod 0	4-150
4-112	Test Arrangement, Pallet Sling, Mk 123 Mod 0	4-151
4-113	Test Arrangement, Hoisting Sling, Mk 126 Mod 0	4-152
4-114	Test Arrangement, Sling, Mk 127 Mod 0	4-153
4-115	Test Arrangement, Pendant for Hoisting Sling, Mk 128 Mod 0	4-154
4-116	Test Arrangement, Hoisting Clamp Frame Assembly Sling, Mk 129 Mod 0	4-155
4-117	Test Arrangement, Pallet Sling, Mk 130 Mod 1	4-156
4-118	Test Arrangement, Pallet Sling, Mk 131 Mod 1	4-157
4-119	Test Arrangement, Pallet Sling, Mk 132 Mod 1	4-158
4-120	Test Arrangement, Double Pallet Sling, Mk 133 Mod 1	4-159
4-121	Test Arrangement, Double Pallet Sling, Mk 134 Mod 1	4-160
4-122	Test Arrangement, Sling, Mk 136 Mod 0	4-161
4-123	Test Arrangement, Sling, Mk 137 Mod 0	4-162
4-124	Test Arrangement, Sling, Mk 138 Mod 0	4-163
4-125	Test Arrangement, Lift Sling, Mk 140 Mod 0	4-164
4-126	Test Arrangement, Battery Sling, Mk 141 Mod 0	4-165
4-127	Test Arrangement, Forklift Truck, Mk 142 Mod 0	4-166
4-128	Test Arrangement, Sling, Mk 143 Mod 0	4-167
4-129	Test Arrangement, Pivot Fixture Sling, Mk 146 Mod 0	4-168
4-130	Test Arrangement, Plenum Cell Cover Sling, Mk 147 Mod 0	4-169
4-131	Test Arrangement, Missile Module Sling, Mk 149 Mod 0 (Sheet 1 of 2)	4-170
4-132	Test Arrangement, Missile Module Sling, Mk 149 Mod 0 (Sheet 2 of 2)	4-171
4-133	Test Arrangement, Missile Module Sling, Mk 150 Mod 0 (Sheet 1 of 2)	4-172
4-134	Test Arrangement, Missile Module Sling, Mk 150 Mod 0 (Sheet 2 of 2)	4-173
4-135	Test Arrangement, Pendant Sling, Mk 151 Mod 0	4-174
4-136	Test Arrangement, Container Lift Sling, Mk 152 Mod 0	4-175
4-137	Test Arrangement, Weapons Handling Sling, Mk 153 Mod 0	4-176
4-138	Test Arrangement, Sling, Mk 154 Mod 0	4-177
4-139	Test Arrangement, Weapons Handling Sling, Mk 155 Mod 0	4-178
4-140	Test Arrangement, Weapons Handling Sling, MK 156 Mod 0	4-179
4-141	Test Arrangement, Sling, Mk 158 Mod 0	4-180
4-142	Test Arrangement, Sling, Mk 159 Mod 0	4-181
4-143	Test Arrangement, Sling, Mk 161 Mod 0	4-182
4-144	Test Arrangement, Sling, Mk 162 Mod 0	4-183
4-145	Test Arrangement, Weapon Handling Sling, Mk 163 Mod 0	4-184
4-146	Test Arrangement, Sling, Mk 164 Mod 0	4-185
4-147	Test Arrangement, Sling, Pendant, Mk 165 Mod 0	4-186
4-148	Test Arrangement, Sling, Pendant, Mk 165 Mod 1	4-187

LIST OF FIGURES (CONTINUED)

Figure	Title	Page
4-149	Test Arrangement, Sling, Mk 166 Mod 0	4-188
4-150	Test Arrangement, Sling, Mk 169 Mod 0	4-189
4-151	Test Arrangement, Sling, Mk 170 Mod 0	4-190
4-152	Test Arrangement, Sling, Mk 171 Mod 0	4-191
4-153	Test Arrangement, Sling, Mk 172 Mod 0	4-192
4-154	Test Arrangement, Sling, Mk 173 Mod 0	4-193
4-155	Test Arrangement, Sling, Mk 176 Mod 0	4-194
4-156	Test Arrangement, Hoisting AUR Container Sling, HLU-265/E	4-195
4-157	Test Arrangement, Strongback, Mk 1 Mod 0	4-198
4-158	Test Arrangement, Strongback, Mk 1 Mod 1	4-201
4-159	Test Arrangement, Horizontal Transfer Assembly Strongback, Mk 3 Mod 0	4-204
4-160	Test Arrangement, Vertical Assembly Strongback, Mk 4 Mod 0	4-206
4-161	Test Arrangement, Cargo STREAM Heavy Lift (GULLWING) Strongback, Mk 5 Mod 1	4-207
4-162	Test Arrengement Vertical Assembly Strongback, Mk 6 Mod 0	4-209
4-163	Test Arrangement, Rope Becket	4-213
4-164	Test Arrangement, Connector, Mk 51 Mod 0	4-214
4-165	Test Arrangement, Battery Lifting Device	4-215
4-166	Test Arrangement, Tailcone Lifting Device	4-216
4-167	Test Arrangement, Cargo Pallet-Net, Mk 16 Mod 0	4-217
4-168	Test Arrangement, Lifting Ring Assembly (MMC 1R00540)	4-218
4-169	Test Arrangement, Cell Maintenance Stand	4-219
4-170	Test Arrangement, Hoisting Strap, H869	4-220
4-171	Test Arrangement, Stand, Assembly, Mk 124 Mod 0	4-221
4-172	Test Arrangement, Motor Puller Tool	4-223
4-173	Test Arrangement, Gas Generator, Lifting Device	4-224
4-174	Test Arrangement, Cargo Hoister Assembly, Mk 20 Mod 0	4-225
4-175	Test Arrangement, Manipulator DALMEC	4-226
4-176	Test Arrangement, Gas Generator Lifting Tool	4-227
4-177	Test Arrangement, Harness Assembly Torpedo Mounted Dispenser	4-228
4-178	Test Arrangement, Harness Assembly Container Mk 594	4-229

LIST OF TABLES

Table No.	Title	Page
4-1	Quick Reference Data, Adapters	4-3
4-2	Quick Reference Data, Bands	4-13
4-3	Quick Reference Data, Beams	4-17
4-4	Quick Reference Data, Booms	4-67
4-5	Quick Reference Data, Carriers	4-73
4-6	Quick Reference Data, Dollies	4-89
4-7	Quick Reference Data, Fixtures	4-97
4-8	Quick Reference Data, Gantries	4-109
4-9	Quick Reference Data, Slings	4-113
4-10	Quick Reference Data, Strongbacks	4-197
4-11	Quick Reference Data, Miscellaneous	4-211

SAFETY SUMMARY

This publication is a safety manual which provides approved testing arrangement for ordnance handling equipments. Failure to observe operating procedures may cause injuries to personnel or result in unreliable ordnance operations. Notes in the text emphasize unusual or special procedures or conditions.

The following warning appears in the text, and is repeated here for emphasis.

WARNING

Testing in progress. Unauthorized personnel keep out. (See page 2-2.)

The following caution appears in the text, and is repeated here for emphasis.

CAUTION

The corner edge bearing surfaces of fixture shall be rounded (1.5-inch radius minimum) to prevent damage to sling legs, as shown below). (See pages 4-122, 4-124, 4-125, 4-131 and 4-185.)

This page left intentionally blank

CHAPTER 1

INTRODUCTION

1-1. PURPOSE

The purpose of this publication is to effect safe, efficient periodic testing of ordnance handling equipment and to provide the criteria for achieving valid test results.

1-2. SCOPE

This publication presents the standard guidelines, test data and testing arrangements for various types of ordnance handling equipment. It includes general safety precautions which shall be observed, visual inspections which shall be conducted before, during and after testing, and it provides data and diagrams necessary for conducting tests of each applicable ordnance handling equipment.

1-3. ORGANIZATION OF MANUAL

Four chapters comprise this manual. Chapter 1 covers purpose, scope, organization and intended use of the manual. Chapter 2 explains the need for testing; identifies the type of handling equipment presented herein performing weight testing; describes hazards inherent to testing operations; presents safety precautions to be observed, including safety equipment and clothing to be used; and provides instructions for properly marking the ordnance handling equipment after testing. Chapter 3 covers test equipment requirements for adequately testing ordnance handling equipment and describes any required test fixtures. Divided into sections, chapter 4 identifies ordnance handling equipment requiring periodic testing, and details specific testing arrangements. It includes tables which list the equipments, appropriate test data and recommended frequency of test.

1-4. DATE OF PUBLICATION

The date of publication of this manual and of revisions and changes thereto, as shown on the title page, is the estimated date the publication is to be distributed. The manual, revision or change is, however, effective upon receipt, regardless of the date shown on the title page.

This page left intentionally blank

CHAPTER 2

PERIODIC TESTING OF ORDNANCE HANDLING EQUIPMENT

2-1. GENERAL

Certain equipment used for handling Naval ordnance must be tested at prescribed intervals to determine if usage of such items shall be discontinued for reasons of safety. The ordnance handling equipment of interest here comprises the following groups: adapters, bands, beams, booms, carriers, dollies, fixtures, gantries, slings, strongbacks and miscellaneous handling equipment. All items within these groups are designed for handling Naval ordnance both aboard ship and ashore, and it is imperative that its safety integrity be ensured by appropriate tests conducted at proper intervals and visible marking on the item clearly indicating its current functional status (defective or operational). The following paragraphs describe periodic weight testing, the principle hazards inherent to testing ordnance handling equipment; the safety equipment and clothing to be worn by personnel performing the tests; the general safety precautions to be observed before, during, and after testing; the minimum requirements for marking defective and operational (safe) equipment.

2-2. WEIGHT TESTING

Periodic weight testing can be performed by any certified shore or shipboard activity. Written certification is required to qualify an activity, provided they comply with the requirements setforth in Appendix A, "Navy Periodic Weight Test Certification Program for Ordnance Handling Equipment Test Facilities." However, the safety procedures outlined in this manual as well as those of OP 4 and OP 5 must be strictly observed. All personnel required to operate test equipment must be trained prior to operation. Test activities are required to maintain current log books detailing the test date, the equipment serial number, stock number and the operator's name.

2-3. PRINCIPLE HAZARDS

Because the performance of tests may involve the use of heavy electrical/mechanical/ hydraulic test equipment (at ground level and overhead) and in many instances heavy and unwieldy ordnance handling equipment, the test area may be subject to the following hazards:

a. Electrical shock and fire

b. Falling objects

c. Flying objects

d. Heavy swinging or rolling objects

e. Jagged edges and/or broken cable strands on equipment being handled

f. Slippery and/or cluttered deck surfaces

Consequently, appropriate precautions shall be observed to prevent personnel injury and damage to Navy equipment and property.

2-4. PERSONAL SAFETY REQUIREMENTS

The test area, being exposed to the aforementioned hazards, shall be subject to strictly enforced safety measures. An appropriate first aid kit shall be available on site; a telephone shall be close at hand for situations requiring emergency vehicles or other aid; and a dry chemical fire extinguisher shall be immediately available at the site as a minimum requirements for extinguishing the following kinds of fires:

a. Those of ordinary combustibles such as wood, cloth, paper, etc. (Class A fires)

b. Those involving hydraulic fluids, grease, oils, etc. (Class B fires)

c. Those involving energized electrical equipment (Class C fires)

As protection from flying objects resulting from applied test forces causing structural failure of the equipment under test, portable steel safety shields with heavy, clear plastic observation windows shall be provided to personnel observing the test. Additionally, all personnel involved with or observing a test shall wear toe guards or safety shoes which meet Navy specifications; they shall wear nonmetallic hard hats as head protection from swinging or falling objects; and they shall wear heavy leather gloves for protection when handling rough, sharp, and irregular objects, particularly equipment with wire rope (dollies and slings).

2-5. GENERAL SAFETY PRECAUTIONS

General safety precautions are those which are applicable to the overall environment of the test site. For example, general housekeeping of the test site shall be conducted regularly to clear the area of debris, unnecessary equipment, and spilled materials such as hydraulic fluid, oil, grease, etc. Outdoor testing shall be postponed in the event of electrical storm, when icing conditions prevail, and during heavy downpour. (Slight rain need not warrant test postponement.) Clearly evident warning signs shall be situated at strategic locations around the test site and shall read as follows:

WARNING

TESTING IN PROGRESS.
UNAUTHORIZED PERSONNEL KEEP OUT.

Outer bounds of the test site shall be established by rope or cable installed in such a way that unauthorized personnel are kept a safe distance from the actual testing activity but permitting unrestricted movement of handling equipment to and from the area. No fewer than two people shall be assigned to perform the procedures required before, during and after the testing of

ordnance handling equipment. Thus, if one person is injured, the other is available to offer aid or call for assistance.

2-5.1. PRECAUTIONS BEFORE TESTING. Prior to the performance of periodic tests, the following precautions shall be observed.

a. Inspect test equipment for deficiencies, and operationally check it for malfunctions, including calibration of indicating instruments. Correct as necessary.

b. Determine that appropriate safety equipment (first aid kit, fire extinguishers, etc.) is on site and is in working order.

c. Ensure that personnel safety shields are properly positioned.

d. Remove from the test area all equipment not required in the performance of the test.

e. Establish telephone headset communications between signalman/operations director and test equipment operator. (If two or more operations personnel are involved, one should act as signalman when attaching handling equipment to the test equipment.)

f. Inspect accessory tiedown pieces, fixtures and associated items, and test item for evidence of any foreign material, such as oil and grease residues, that would cause an unsafe handling condition. Clean accordingly.

g. Situate the test item in an area immediately adjacent to the test site so as to minimize handling operations and to facilitate efficient and unobstructed movement of handling equipment to and from the area.

h. Using proper Maintenance Requirement Cards (MRC's), visually inspect the test item and reject if it has obvious defects such as fractures in structural members, shackles, hooks, pins, thimbles, cable clips, and swaged fittings. Inspect cables and reject if they have broken and/or abraded strands, kinks, and sharp bends. Inspect nylon rope slings and reject if found to have frayed and/or broken stitching; inspect nylon webbed slings and reject if found to have broken and/or missing stitches, cuts in nylon webbing, or evidence of ultra-violet degradation; inspect steel cable slings and reject if found to have one or more broken or cut strands; inspect wire-rope slings and reject if inspection reveals: corrosion or pitting, kinks, crushing, birdcaging, or any other physical damage which has resulted in distortion of the wire rope structure, six or more broken wires in one rope lay length or three or more broken wires in one strand lay length, or one or more broken wires with one rope lay length of any end fitting. Inspect chains and reject if links are broken, stretched more than five percent, or worn more than 10% of its original size.

i. The overall length of non-metallic slings shall be measured prior to weight testing. Slings not used six months or more may be exercised to eliminate material shrinkage prior to conducting weight test. Slings shall be pulled to its SWL, held for one minute and then relaxed prior to conducting periodic weight test.

NOTE

Chain links should not bind.

2-5.2. PRECAUTIONS DURING TESTING. After the equipment under test is properly attached to the test equipment tiedowns and test loading device, all personnel except the signalman/operations personnel and test machine operator shall be stationed behind protective safety shields during the test; the test equipment and its operator shall be similarly protected but in an enclosed shelter that affords protection from the weather as well. These individuals shall remain at their protective stations until the test is completed, as signified by release of test-load forces from the handling equipment under test. At this point it is safe to detach the handling equipment from the test equipment tiedowns and loading device.

2-5.3. PRECAUTIONS AFTER TESTING. Upon completion of test, personnel shall exercise extreme care while detaching the handling equipment from the test equipment tiedowns, fixtures, etc., and removing the handling equipment from the test area for inspection. The tested handling equipment shall be visually inspected for defects such as those described in paragraph 2-5.1.h. When a test is completed, all equipment, tools, materials, etc., shall be removed from the test site except that which is required to perform the next test.

Non-metallic slings must recover to within 2% of the initial length recorded prior to the start of the load test within 24 hours under the same humidity and temperature conditions during the testing period. Slings beyond 2% shall be rejected.

2-6. MARKING DEFECTIVE HANDLING EQUIPMENT

Ordnance handling equipment found to be defective shall be affixed with a tag containing a description of the defect(s) and shall be set aside in a designated area for further disposition. It shall not be placed in service under any circumstances unless repaired and retested to prove that its safe working load (SWL) is as specified.

2-7. MARKING SAFE HANDLING EQUIPMENT

Ordnance handling equipment that has satisfactorily passed the initial visual inspection and subsequent periodic load test shall be so marked by the facility performing the tests. A record of each test shall be maintained by the testing facility. Equipment passing periodic weight testing must indicate the following information either stenciled, etched or engraved on the equipment.

TEST FACILITY: _____
(testing activity name)

TEST EXPIRATION DATE: _____
(month/year)

SAFE WORKING LOAD: _____ POUNDS
(number)

The method of marking shall be appropriate to the particular item, subject to the requirements of OP 4 for ships or OP 5 for shore activities and the following limitations:

a. No stenciling onto non-metallic, weight-bearing components of lifting equipment shall be permitted other than that stenciling provided by the original equipment manufacturer (OEM).

NOTE

Existing non metallic OHE already having stenciling as a means of indicating the equipment has been tested in grandfathered for use. Slings manufactured under contracts issued after 1997 will under no circumstances have stenciling other than OEM marking. See the note under paragraph 10-5.3.2a of OP 5 Volume 1 for inspection requirements.

b. No stitching of non-OEM labels shall be permitted.

c. OEM applied die/steel stamping is acceptable for OHE and OHE components including swages.

d. No local die/steel stamping on components of lifting equipment (e.g., swages, hooks, shackles, lifting rings, lifting links, turnbuckles, swivels, eyebolts, etc.) shall be permitted, except as need to place trampoints/markings on hooks.

e. The main bodies of carriers, beams, strongbacks, spreader bars and similar equipment may be die/steel stamped with a local serial number.

f. Local marking (serial numbers) applied via vibra-etching are acceptable on OHE and OHE components.

g. Weight handling equipment (WHE) - cranes, lifts and hoists (see paragraph 10-6 of OP 5 Volume 1) shall comply with the requirements of NAVFAC P-307.

h. Shackles used with ordnance shall be marked as described in paragraph 10-5.2B of OP 5 Volume 1.

i. Previously-marked OHE, with locally applied die/steel stamped data is considered acceptable for use during the current weight test cycle, provided all inspection and weight test requirements have been successfully met. These items shall be replaced prior to the expiration of the current weight test cycle (maximum of four years from May 1998). The only exception to this is for OHE that has undergone non-destructive testing (NDT) after the local serial number was die/steel stamped. This NDT must be performed by certified personnel and show no failure indications. Documentation must be maintained in an equipment file for this OHE.

j. Tagging/marking methods shall not interfere with the use of the lifting equipment.

New marking/test tag information must be applied when equipment is periodically tested or at the time the tag is changed upon receipt of new equipment as detailed in NAVSEA OP 4 or OP 5.

CHAPTER 3

TEST EQUIPMENT

3-1. GENERAL

The test arrangements prescribed in this manual are the typical, suggested scheme for periodic testing, and are based on a simulation of the load conditions which the items actually experience during service use. Various equipment can be used to achieve these simulations and to meet the test load/duration requirements. The following paragraphs present suggested test equipment capable of subjecting the ordnance handling equipment to predetermined load forces and of sustaining these forces for the prescribed time durations.

3-2. DESCRIPTION

Typical equipment used for periodic testing of ordnance handling equipment is:

a. Tiedown base and associated hardware

b. Hoisting equipment

c. Load application equipment

d. Instruments to measure applied loads

e. Test fixtures

3-2.1. TIEDOWN BASE AND ASSOCIATED HARDWARE. The tiedown base generally is a fixed, stable flat surface for securing the handling equipment, or test fixture, whichever is appropriate, during test-load application. It can also serve as a foundation for the structure, typically an A-frame, supporting the overhead hoisting/load device. A typical tiedown base may be constructed of reinforced concrete; however, bases of other suitable material, such as steel plate, may be used if sufficiently strong and stable enough to withstand the applied forces. On its top surface a number of tiedown points should be situated in a pattern which provides the least number of tiedowns for the variety of handling equipment the facility normally tests. Typical tiedowns would include a combination of threaded sockets (preferably 1-inch by 8 thread) and threaded swivel tiedown rings, similar to the one shown in figure 3-1. The swivel tiedown rings, when screwed into the appropriate sockets, provide points to secure the equipment under test or for associated fixtures, whichever is applicable. It is recommended that swivel tiedown rings be fabricated of chrome moly steel and have a safety factor of 5.0, based on a rated load of 10,000 pounds. The ring should swivel 360 degrees and pivot 180 degrees, and when screwed into a socket, the stud should be torqued to approximately 87 foot pounds to assure that the tiedown ring itself is adequately secure.

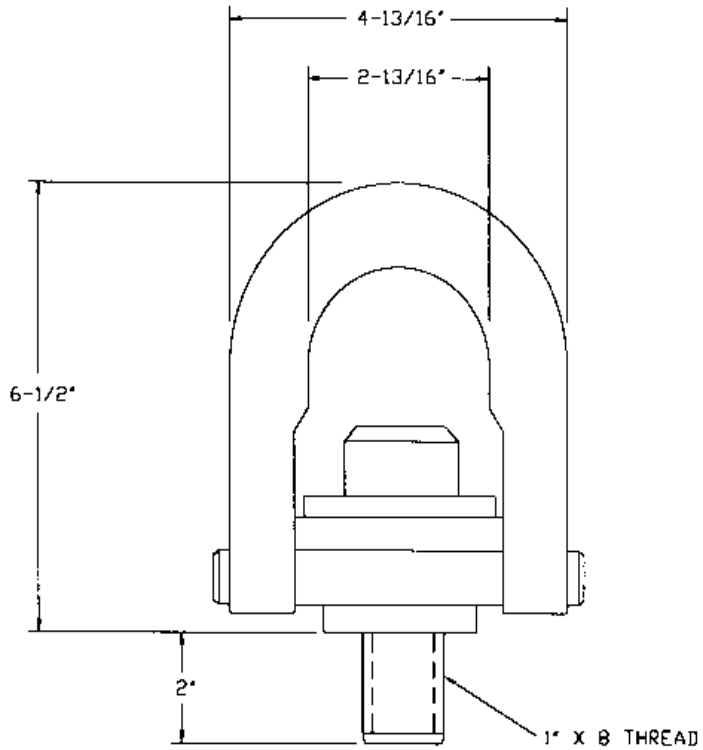

FIGURE 3-1. Typical Swivel Tiedown Ring

3-2.2. HOISTING EQUIPMENT. The overhead hoisting equipment, typically an electric driven chain hoist and hook, provides the means for attaching the test item to the load application equipment. The hoisting hook is lowered to ground level and secured to the test item or its associated fixture, depending on the ordnance handling equipment being tested. The hoisting hook must be raised until all or most slack is removed, and the hoisting equipment must be locked so that the chain fall cannot move. Essentially, the hoisting equipment becomes an extension of the test item.

3-2.3. LOAD APPLICATION EQUIPMENT. The load application equipment, typically a hydraulically controlled piston, adjusts the height of the hoisting equipment and produces the required test load condition. Therefore, raising the load application equipment will tense all connections to the test item, which is secured to the tiedown base. From this point, the tensile force can be increased to the prescribed test-load value. To adequately support hoisting/load application equipment, a framework of structural steel members on a reinforced concrete base is required. The structural components shall provide a design safety factor of 2.0, based on yield strength of the material. If the testing facility is involved in testing most or all of the ordnance handling equipment included in this manual, it is recommended that the test equipment used have a design test load capacity of 30,000 pounds and be proof tested to 37,500 pounds.

3-2.4. INSTRUMENTS TO MEASURE APPLIED LOADS. Periodic testing requires instruments that are capable of measuring relatively fine height adjustment of the hoisting/load application equipment and indicating devices which accurately show the prescribed test load in pounds. Equipment must be able to sustain the test load for a time duration of two or five minutes, whichever is specified. After the test is completed and the test data recorded, the controls must be capable of releasing the tensile force in a safe manner and allowing the load application equipment to be lowered to a point where the chain hoist can be operated independently for test item removal. The test equipment must be capable of subjecting the test item to 40 percent of its design load with a tolerance of plus 5% and minus 0 for test loads less than 20,000 pounds and plus 1,000 pounds minus 0 for test loads 20,000 pounds or more. The design load is based on computations of three times the safe working load (SWL) or five times the SWL dependent upon the intended use of the equipment. (An exception is the Mk 5 Forklift Truck Boom; see figure 4-53). The test equipment must also sustain the test load for the stipulated time duration. Accordingly, the test equipment shall be calibrated and certified to assure valid test data.

3-2.5. TEST FIXTURES. Ordnance handling equipment (OHE) having hooks or shackles, such as certain beams, slings, and carriers can often be attached directly to the swivel tiedown rings, as described in paragraph 3-2.1. However, in many instances, special fixtures with attaching fittings must be used together with the ordnance handling equipment in order to secure it properly to the tiedown base and, in some cases, to the hoisting equipment. These fixtures, which are fashioned to simulate the load conditions which the OHE actually experience in service use, may be in the form of mandrels and a variety of preformed shapes. All must be able to withstand the prescribed test loadings. Some specialized test fixtures are described in the following paragraphs. Each paragraph provides a physical and a functional description of the fixture. An illustration gives further descriptive information. Finally, a drawing number is provided, where possible, to facilitate local fabrication of fixtures. Test fixtures are suggested, not mandated (except for the Mk 25 Tilt Fixture). All other applicable requirements of this manual and OP 5 should be followed.

NOTE

If suggested fixture is used, any deviation to the fixture must be submitted to Packaging, Handling, Storage, and Transportation (PHST) Center. Naval Surface Warfare Center (NSWC) Indian Head Division, Detachment Earle for approval.

3-2.5.1. Adapter, Lifting, CLS TOMAHAWK, Test Plate. The CLS TOMAHAWK test plate is a rectangular steel plate 55 inches long, 41 inches wide, and 3 inches thick. The plate has four outside holes which are used to bolt the plate to a test base. The plate has four threaded holes which are used as a holddown point for bolting the adapter to the plate. The plate also has eight holes to accept the threaded studs that are on the bottom of the lifting adapter. The test plate is shown in figure 3-2.

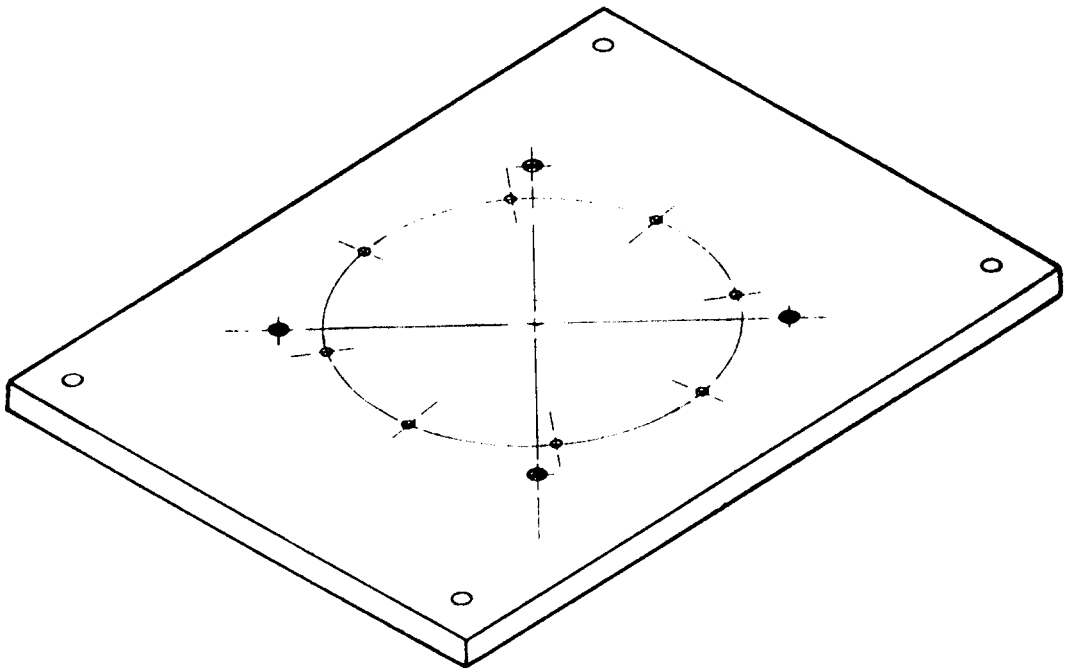

FIGURE 3-2. CLS TOMAHAWK Lifting Adapter, Test Plate (NWSE 10502)

3-2.5.2. Adapter, Weight Test, BSS Lifting Fixture. The weight test adapter for the BSS Vacuum/Lifting Fixture (NAVSEA DWG 6277140) is an altered Mk 50 Torpedo hull section with the female end Hilmer joint. It is 12.75 inches in diameter and 12 inches long. There are three 1.5 inch diameter holes at 120° intervals for connection of the three leg sling (NAVSEA DWG 6276505) that attaches to the test apparatus. It is attached to the lifting fixture using a set of Hilmer bands. The weight test adapter is shown in figure 3-3

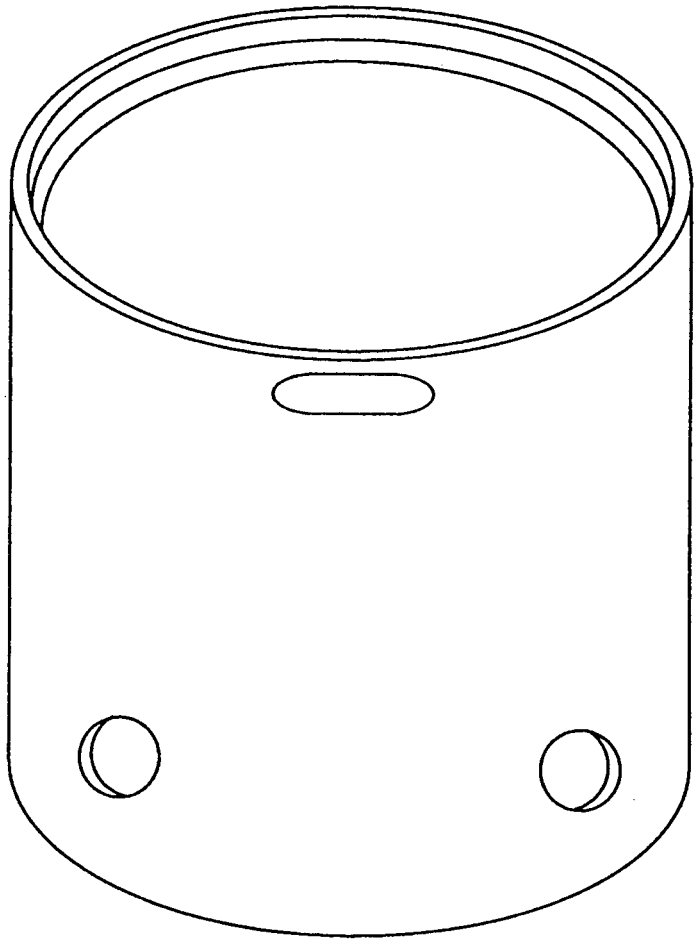

FIGURE 3-3. BSS Lifting Fixture Weight Test Adapter
(NAVSEA Dwg 6823667-002)

3-2.5.3. Adapter, Weight Test, Boiler Lifting Fixture. The weight test adapter for the Boiler Lifting Fixture (NAVSEA DWG 6276412) is a stainless steel disc three inches in diameter and one inch thick. It has a .50-13 eye bolt installed in the center and is threaded for three .312-24 UNF-2B bolts used to attach it to the lifting fixture. The weight test adapter is shown in figure 3-4.

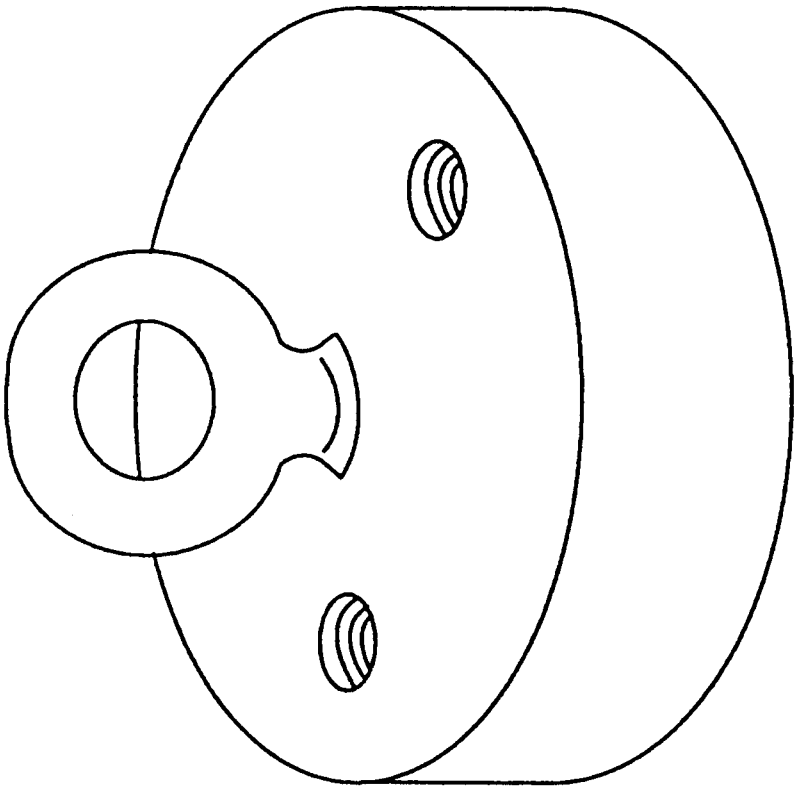

FIGURE 3-4. Boiler Lifting Fixture Weight Test Adapter
(NAVSEA Dwg 6747157)

3-2.5.4. Adapter, Weight Test, Oxidant Tank/Condenser Lifting Fixture. The weight test adapter for the Oxidant Tank/Condenser Lifting Fixture (NAVSEA DWG 6276425) is an altered Mk 50 Torpedo hull section with the male end Hilmer joint. It is 12.75 inches in diameter and 12 inches long. There are three 1.5-inch diameter holes cut at 120° intervals for connection of a three leg sling (NAVSEA DWG 6276505) that attaches to the test apparatus. It is also used to adapt the Warhead/FES/Boiler Lifting Harness 5619390 during weight test. The weight test adapter is shown in figure 3-5.

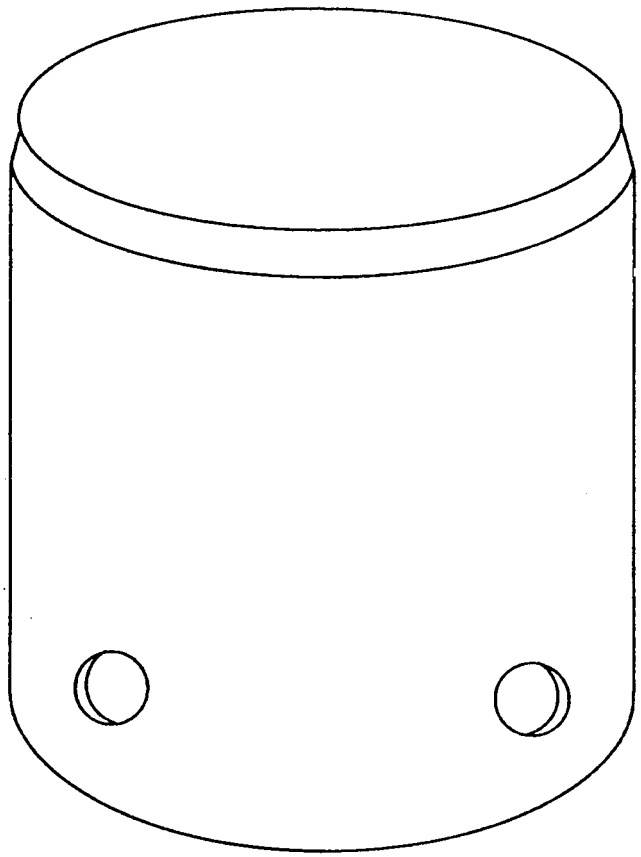

FIGURE 3-5. Oxidant Tank/Condenser Lifting Fixture Weight Test Adapter (NAVSEA Dwg 6823667-001)

3-2.5.5. Adapter, Weight Test, Gas Generator Lifting Tool. The weight test adapter for the Gas Generator Lifting Tool (NAVSEA DWG 6277128) is a steel plate two inches square and .75 inches thick. It has a one inch diameter hole cut through for attachment to the test apparatus and a .375-24 UNJF-3A threaded hole for attachment to the lifting tool. The weight test adapter is shown in figure 3-6.

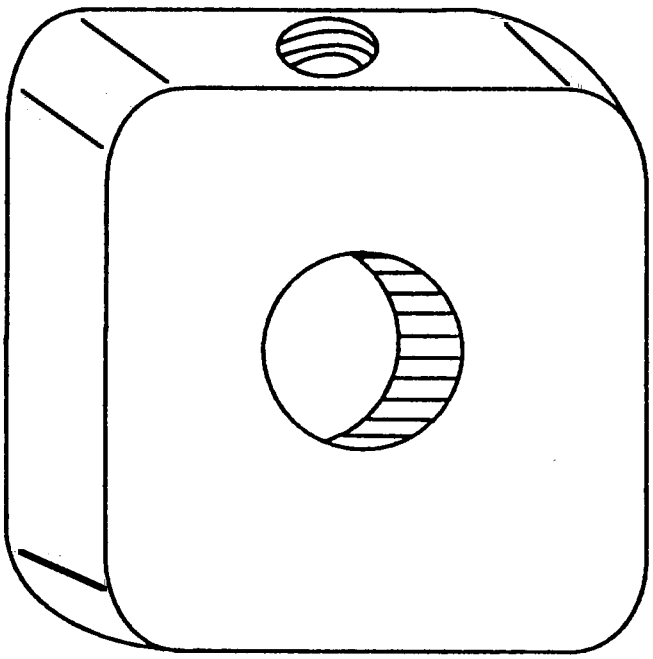

FIGURE 3-6. Gas Generator Lifting Tool Weight Test Adapter (NAVSEA Dwg 6747158)

3-2.5.6. Adapter, Sill Lift Mk 166 Mod 0 Test Fixture. The test fixture is a rectangular aluminum fixture, 15.50 inches long and 1.50 inches wide. The fixture features a threaded eye bolt attached in the center to be used as a tiedown point and has 3.75-inch recesses at both ends to accomodate the side lift brackets on the sill lift adapter. The fixture is used in pairs to proof test one Mk 166 Mod 0 Sill Lift Adapter. The test fixture is shown in figure 3-7.

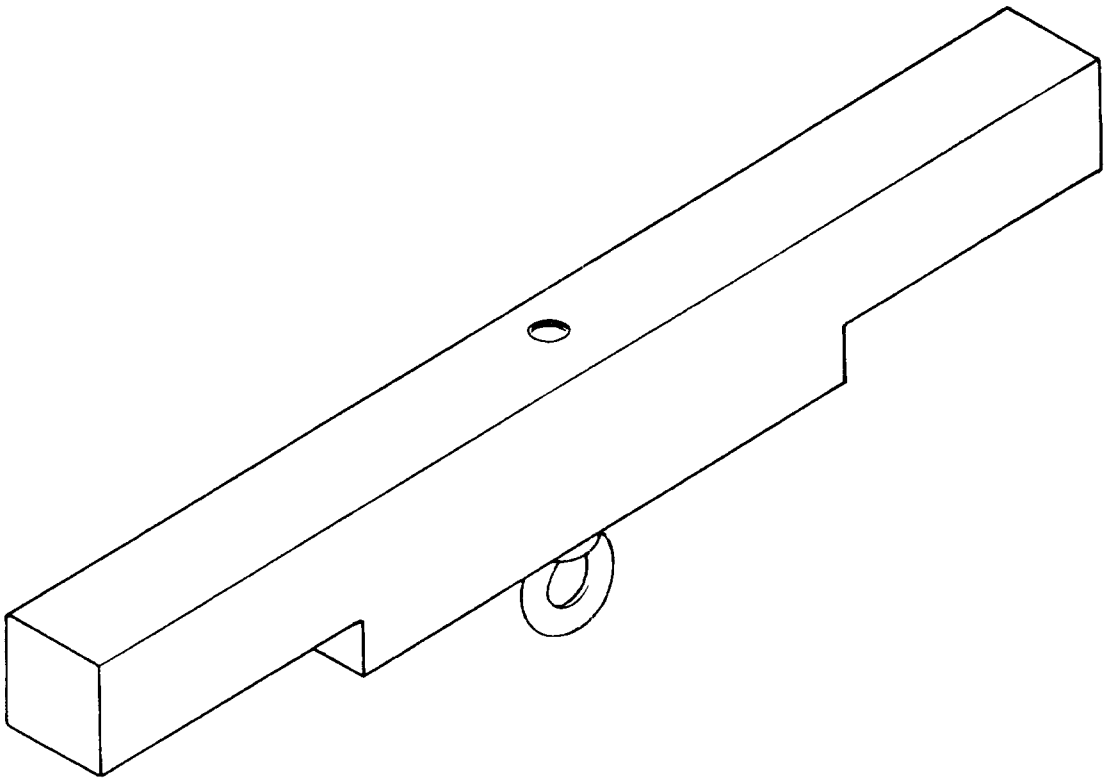

FIGURE 3-7. Mk 166 Mod 0 Sill Lift Adapter Test Fixture (Dwg. 6213007)

3-2.5.7. Beam, Hoisting, Mk 4 Mod 2, Mk 5 Mod 2 Test Fixture. The test fixture consists of two T-shaped tiedowns with a hole drilled through the center of the base plate to accommodate various tiedown equipment. The two pieces of the fixture simulate the forward and aft shoes on TARTAR missiles and rocket motors and interface with the forward and aft shoe clamps on the hoisting beams. Figure 3-8 illustrates the test fixture.

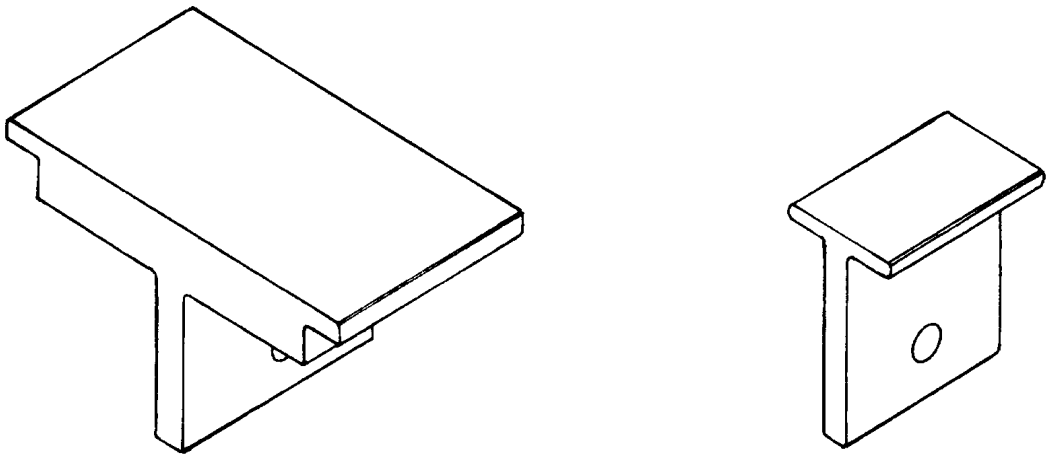

FIGURE 3-8. Mk 4 Mod 2, Mk 5 Mod 2 Hoisting Beams Test Fixture

3-2.5.8. Beam, Lift Mk 32 through 38 Mod 0, Mk 37 Mod 1 Test Fixture. The test fixture for the Mk 32 through 38 HARPOON lifting beams consists of an I-beam/ring steel and mechanically assembled aluminum weldment, supported at its forward end by a tubular A-frame and at its aft end by a tubular upright. The A-frame and the upright are supported on rubber wheels, the aft wheel being a swivel caster with a foot operated brake. The I-beam/ring assembly includes attachment devices for enabling installation and securement of a variety of lift beams used for handling HARPOON missiles, capsules and sections. The attachment devices are of two types, one type simulating the different launch shoes associated with HARPOON missiles and the other (four rings) simulating the diameters and configurations of HARPOON missile sections and capsules. The rings enable installation of those HARPOON lift beams which use straps to secure the load. Four holes along the lower edge of the test fixture are for attaching to ground. Operating procedures for this test fixture is found in OR-67/60. Figure 3-9 illustrates the test fixture.

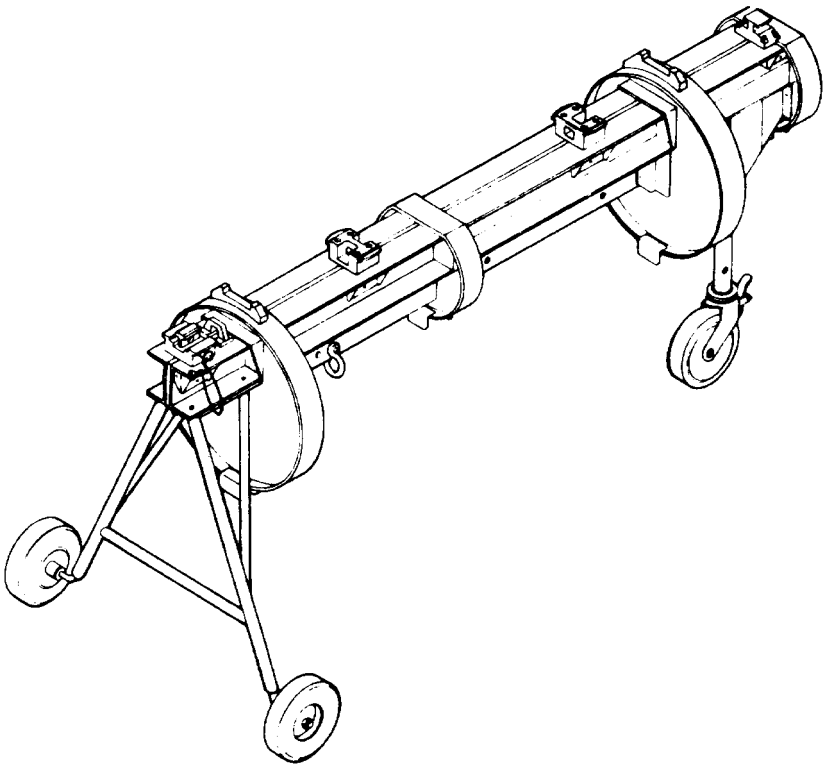

FIGURE 3-9. Mk 32 through 38 Mod 0, Mk 37 Mod 1 Lift Beam Test Fixture (DL 5166534)

3-2.5.9. Beam, Canister, Adapter Lift Mk 50 Mod 0 Test Fixture. The test fixture for the Mk 50 Mod 0 Canister Lift Adapter Beam is an aluminum fixture consisting of a rectangular-tubed base and two angles with welded gussets. The base is 48 inches long, 6 inches wide, 0.375 inch wall thickness and two holes, which are 2 inches from the base ends. The angles are 14.75 inches high and are 0.25 inch thick. The gussets are 13 inches high and are 0.25 inch thick. This text fixture is shown in figure 3-10.

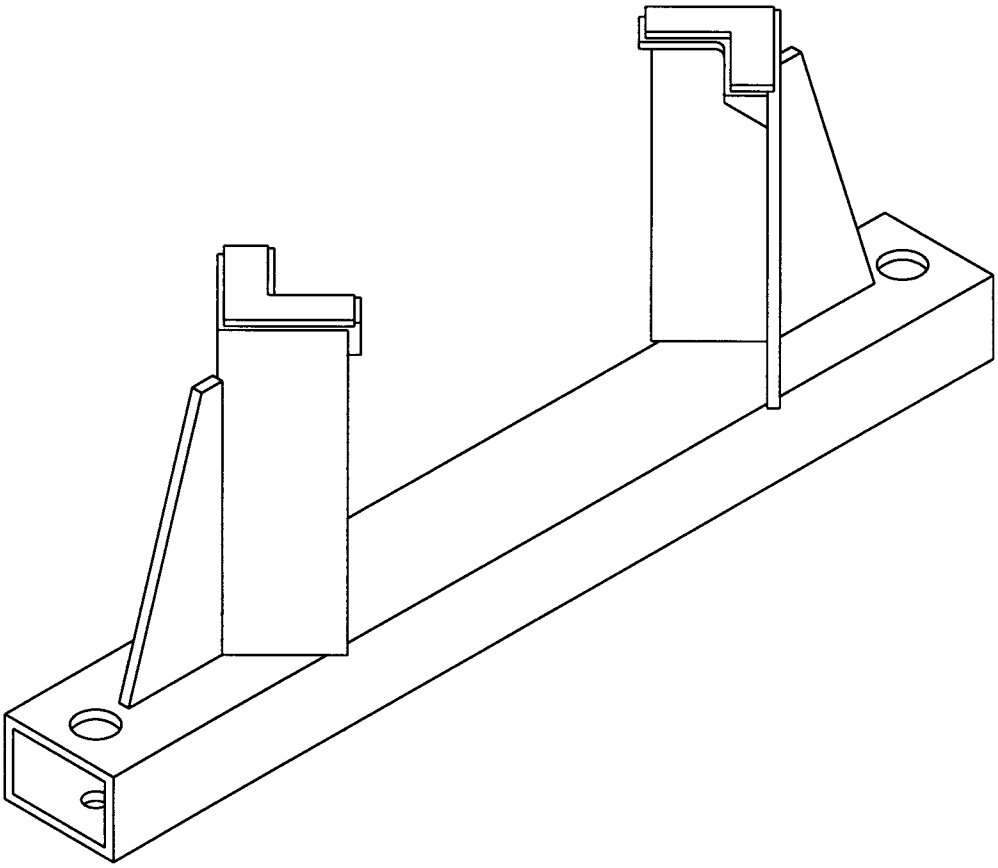

FIGURE 3-10. Mk 50 Mod 0 Beam Canister Lift Adapter Test Fixture (Dwg 6213813)

3-2.5.10. Beam, Vertical Launch ASROC (VLA) Missile Hoisting, Mk 51 Mod 0 Test Fixture. The test fixture for the Mk 51 Mod 0 Vertical Launch ASROC (VLA) Missile Hoisting Beam consists of two individual T-shape shoes configured at the upper end to join with the beam shoe receptacle and has a hole at the lower end to allow for tiedown capabilities. The test fixture is shown in figure 3-11.

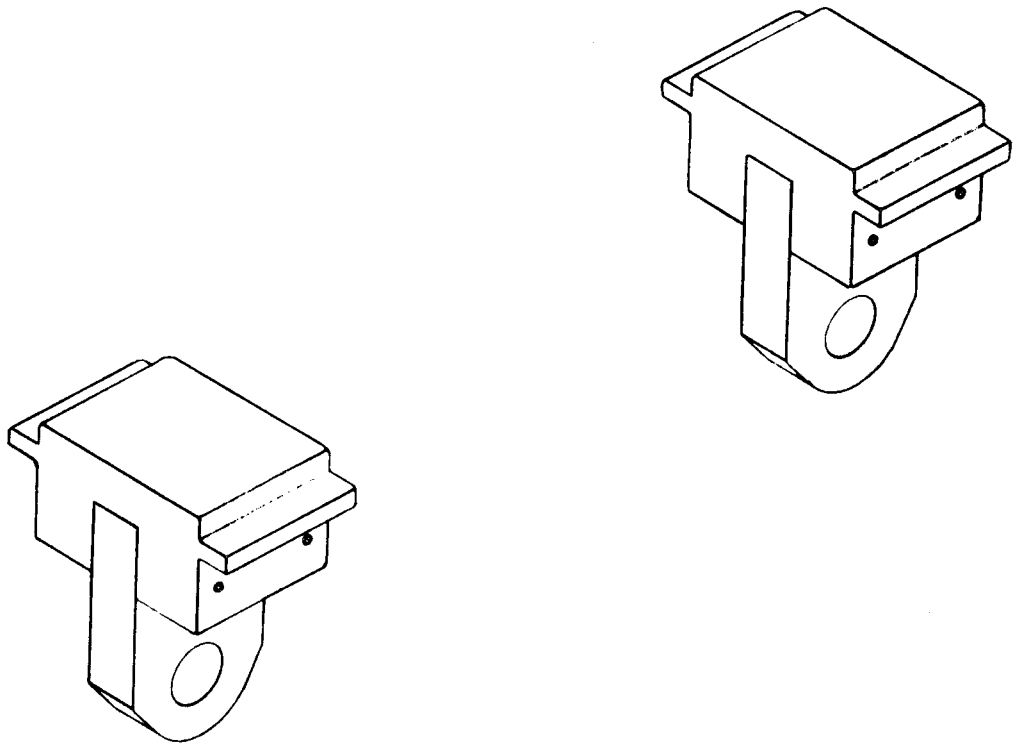

FIGURE 3-11. Mk 51 Mod 0 VLA Missile Hoisting Beam Test Fixture (Dwg 6212963)

3-2.5.11. Beam, Dual Thrust Rocket Motor (DTRM) Mk 61 Mod 0 Test Fixture. The test fixture for the Mk 61 Mod 0 DTRM Hoisting Beam consists of two individually shaped pieces. The Forward End Fixture (6213843) attaches to the beams forward adapter, while the Aft End Fixture (6213842) attaches to the beams aft adapter. Both fixtures are equipped with shackles to allow for tiedown. The test fixtures are shown in figure 3-12.

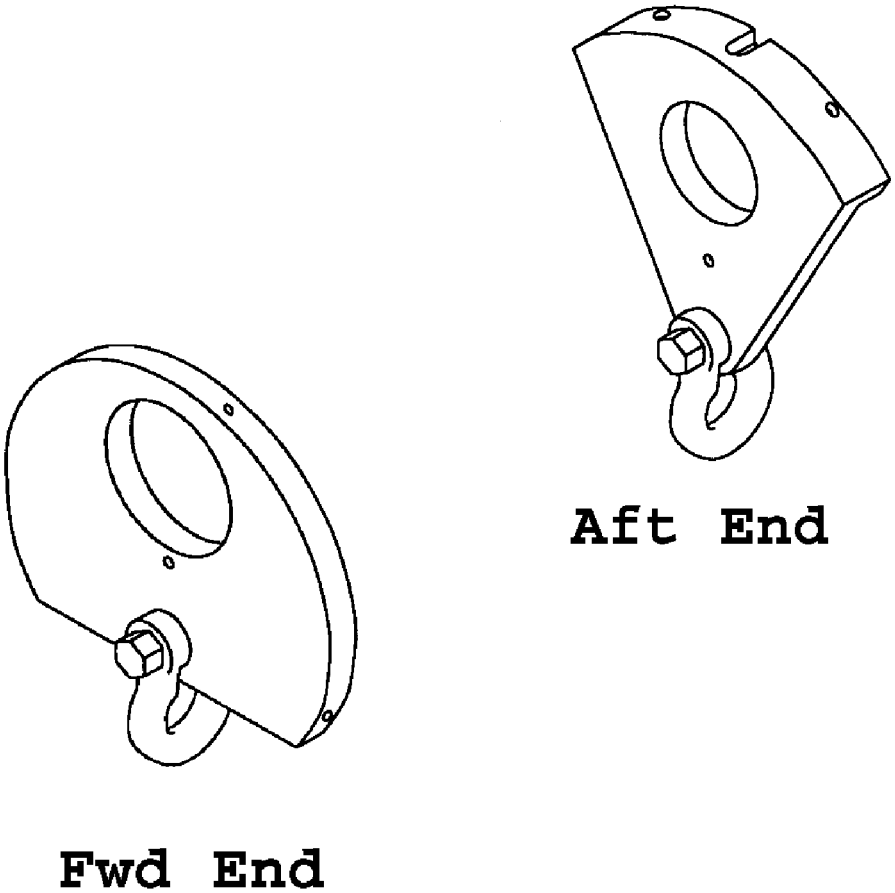

FIGURE 3-12. Mk 61 Mod 0 Hoisting DTRM Beam Test Fixture
(Dwg. 6213842 Aft End and Dwg. 6213843 Fwd End)

3-2.5.12. Multiple Beam Test Fixture. The test fixture for multiple beams consists of four 3/4-inch eyebolts 4-1/2 inches long, four 3/4-inch hex nuts and washers. The fixture is designed to be used as a tiedown point for beams having crossmember pockets that interface with HARPOON canisters. The fixture is shown in figure 3-13.

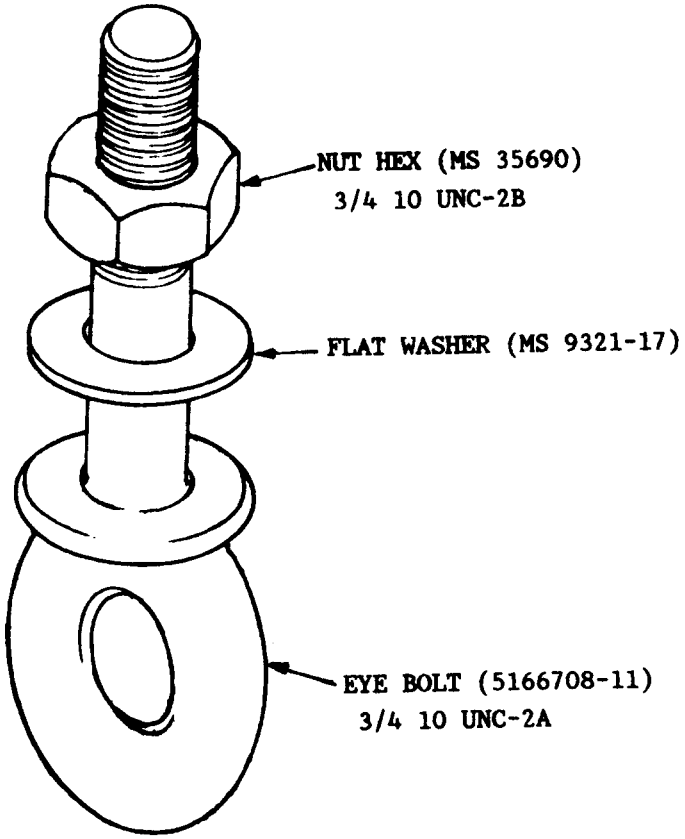

FIGURE 3-13. Multiple Beam Test Fixture

3-2.5.13. Carrier, Spider Mk 60 and Mk 61 Mod 0 Test Fixture. This fixture is a triangular metal fixture with a gusseted support tube welded to one side and terminating with a metal eye for a tiedown point. The opposite side has three threaded studs, attached to the corners of the fixture, which align with the locking bolts (wingnuts) to secure the spider assembly to the test fixture. The fixture is used in the vertical and horizontal positions. The test fixture is shown in figure 3-14.

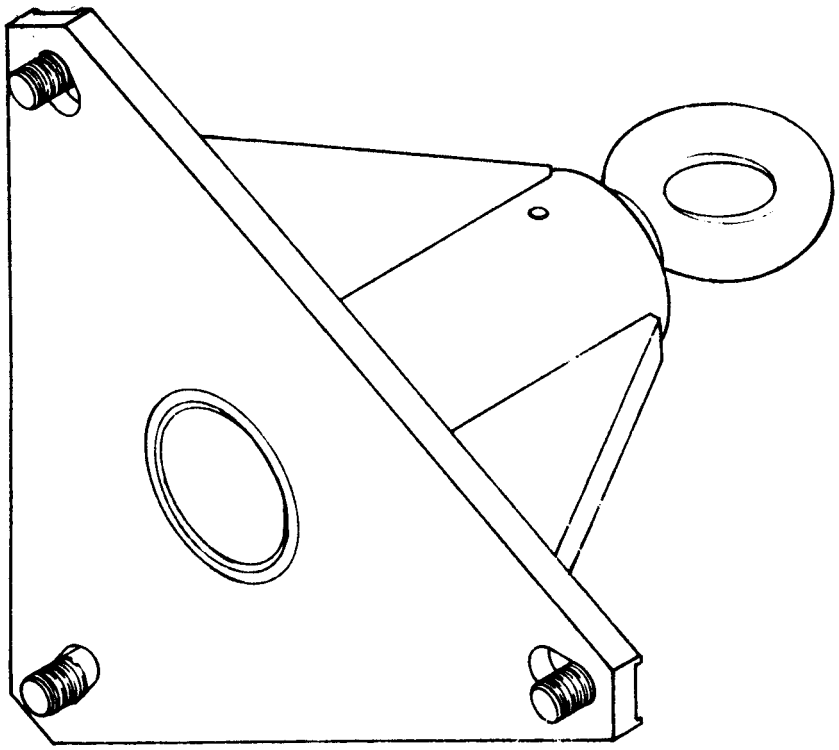

FIGURE 3-14. Mk 60 and Mk 61 Mod 0 Spider Carrier Test Fixture (Dwg 6213000)

3-2.5.14. Dolly, Mk 6 and Mk 30 Mods STREAM Adapter Test Fixture. The test fixture for the STREAM adapter of the Mk 6 and Mk 30 dollies is an aluminum channel 93.25 inches long and 5.00 inches high with cross-beams 38 inches long, huck bolted to the main frame at each end with one more crossbeam huck bolted 67-3/8 inches from the forward end. Each crossbeam has two spacers huck bolted to the ends and protruding out the bottom. The spacers have drilled holes at the bottom to allow connecting couplers to be bolted to them. The couplers are also bolted to a 3/8-inch length of chain made of alloy steel. These chains are then connected to another set of couplers which are bolted to lift bar weldments. Each lift bar weldment is configured to interface with the STREAM adapters of the Mk 6 and Mk 30 dollies. The lift bar weldments are secured in the adapter by quick-release pins. The beam also features two lifting eyes huck bolted near the forward end to allow for mod variation. The distance between the top of the lifting eye and the bottom of the lift bar weldment is 42-3/8 inches. This must be consistent on all four pick-up points to ensure equal tension is applied to the adapter. The test fixture is shown in figure 3-15.

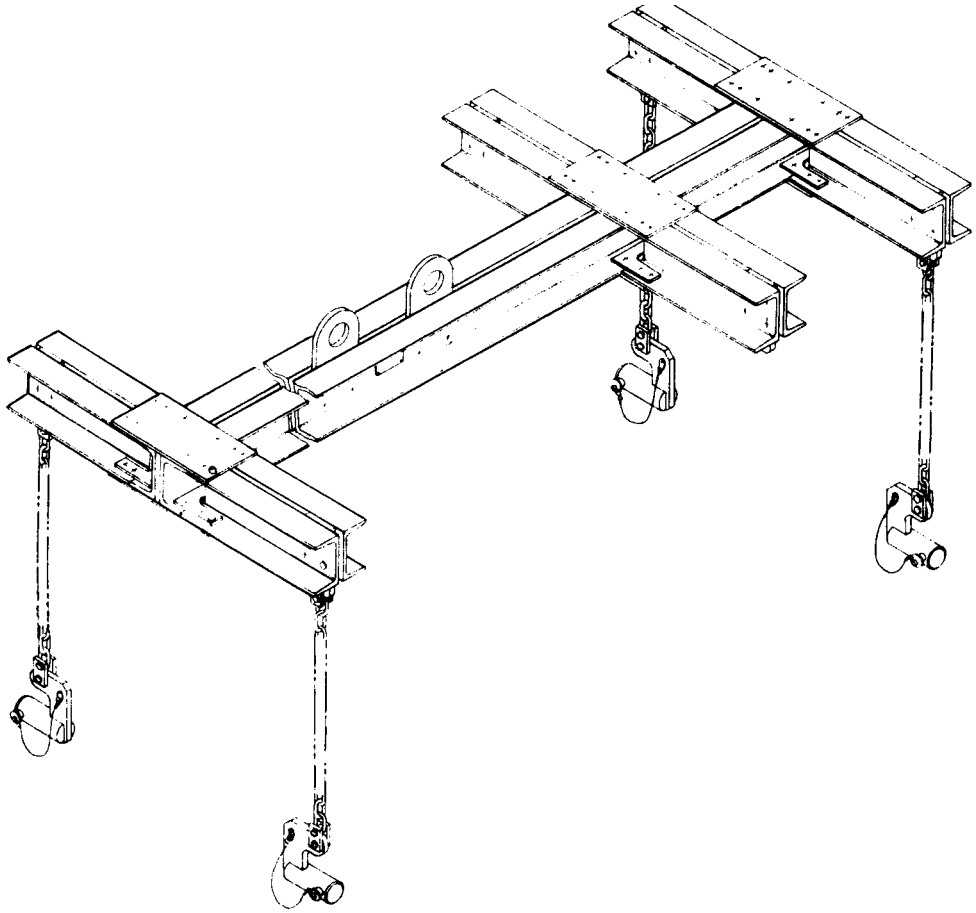

FIGURE 3-15. Mk 6 and Mk 30 Dolly STREAM Adapter Test Fixture (DL 5166612)

3-2.5.15. Dolly, Mk 6 and Mk 30 Mods Rail Test Fixture. The test fixture for the Mk 6 and Mk 30 Dolly Rail is an aluminum alloy tube 83.25 inches long and 2.25 inches in diameter. The beam features a coupler, with a forward shoe, secured between two pinned collars. At the lower end of the coupler a sling leg, 20 inches long with a safety hook, is attached for forward tiedown point. At the opposite end of the beam there is a coupler, with an aft shoe secured between two pinned collars. The aft coupler also has a 20-inch sling leg attached for the aft tiedown point. Each coupler swivels independently of each other to ease entry into the dolly rail. The test fixture is shown in figure 3-16.

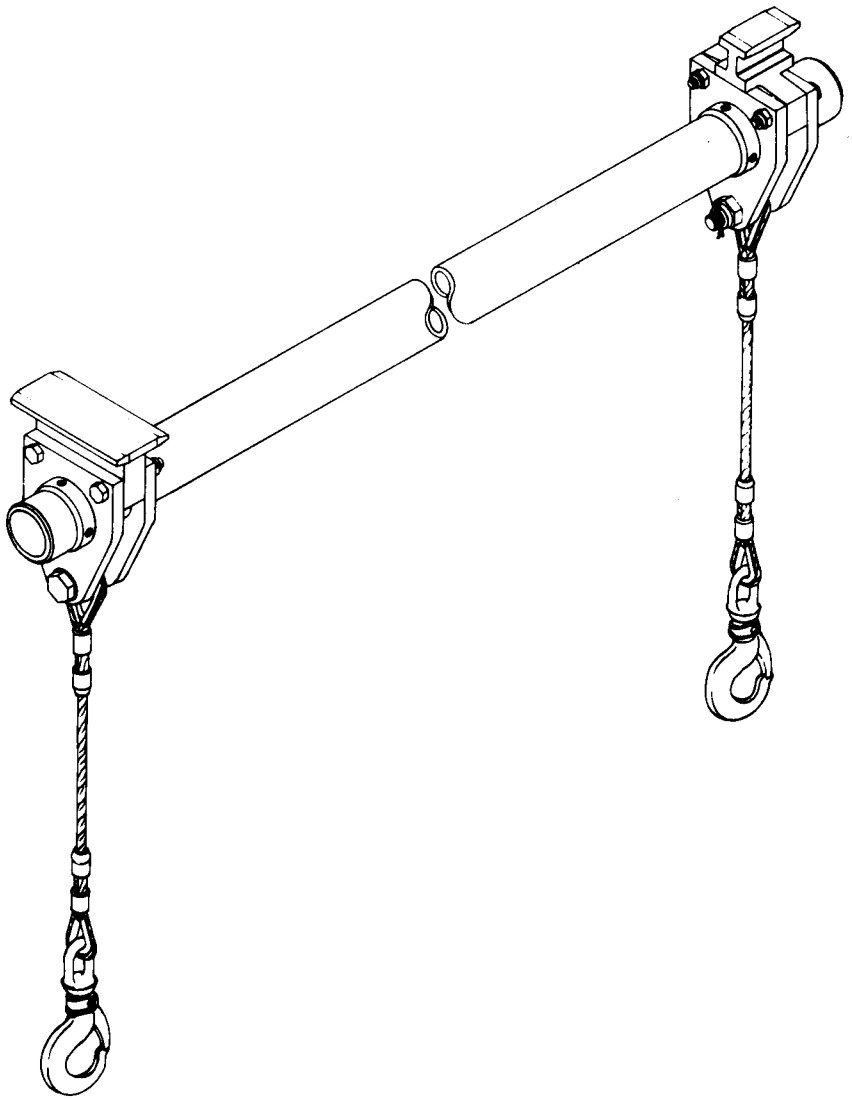

FIGURE 3-16. Mk 6 and Mk 30 Dolly Rail Test Fixture (NWHC 7881)

3-2.5.16. Fixture, Tilt Mk 25 Mod 0 Test Fixture. The test fixtures are used ashore to test and recertify fleet returned Mk 25 Tilt Fixtures. The Mk 25 Tilt Fixture is used onboard combatant ships to strikedown Mk 13, 15, 19, and 22 Canisters into the Mk 41 VLS Launching System. The Mk 25 Tilt Fixture consists of four major subassemblies; Pivot Fixture, Pivot Fixture Receiver Locator Beam, Steady Rest Assembly, and Steady Rest Beam. The operation and maintenance of the test fixtures is described in NAVSEA SW394-AJ-MMI-010, Mk 25 Mod 0 Shipboard VLS Tilt Fixture Test Fixtures, Description, Operation and Maintenance (DOM) Manual and Illustrated Parts Breakdown. Activities certified to test the tilt fixture are Shore Intermediate Maintenance Facilities, Mayport, FL, Norfolk, VA and San Diego, CA, Ship Repair Facility (SRF), Yokosuka, and Intermediate Maintenance Facility (IMF), Pearl Harbor, HI. The test fixture is shown in figure 3-17.

Mk 25 Mod 0 Test Fixture		**DL 6213559**
1	Steady Rest Test Fixture Assembly	DL 6213459
2	Pivot Fixture Test Fixture Assembly	DL 6213476
3	Beam Weldment Test Fixture Assembly	DL 6213505
4	Hydraulic Control Cart Assembly	DL 6213545
5	Pivot Fixture Brake Test Fixture	DL 6213534

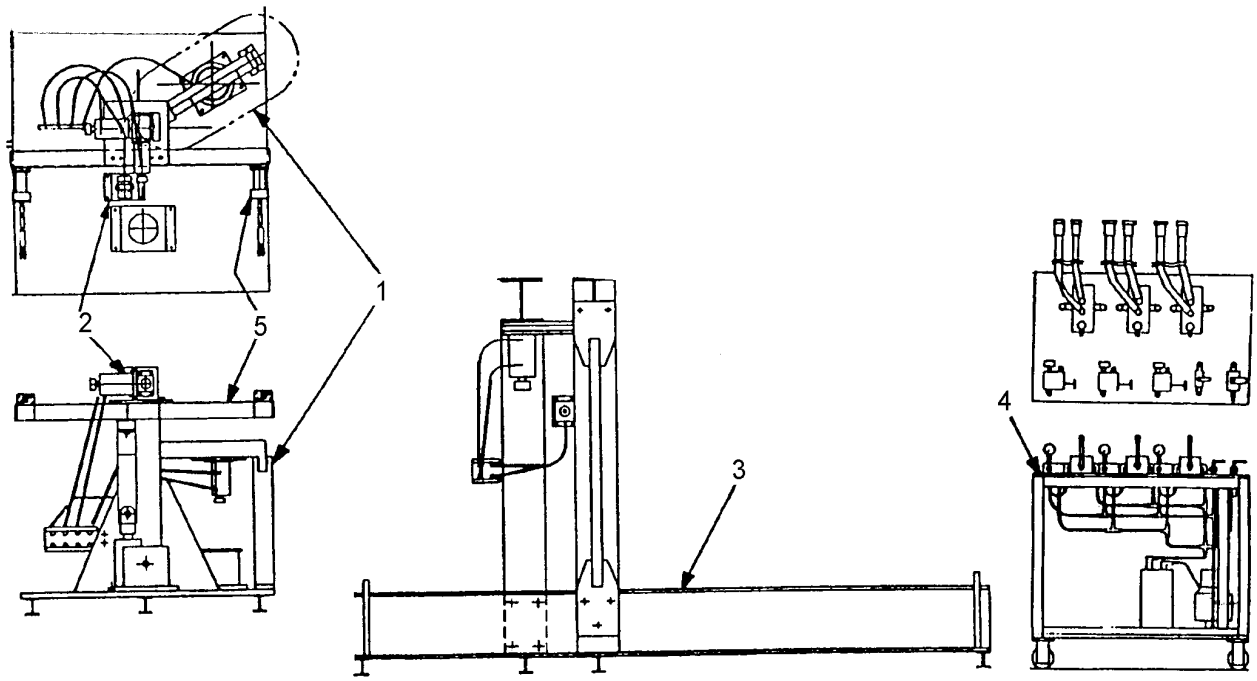

FIGURE 3-17. Mk 25 Mod 0 Tilt Fixture Test Fixture (DL 6213559)

3-2.5.17. Fixture, Handling, Lower Airframe Mk 27 Mod 0 Test Fixture. The test fixture set for the Mk 27 Mod 0 Lower Airframe Handling Fixture consists of an aluminum forward end plate and aft end plate. The forward end plate is a triangular shaped plate 1-inch thick and 14 inches wide with two rectangular holes which interface with the Mk 27 Mod 0 Fixture and one 1-1/4 inch round hole at the lower end for tiedown access. The forward end plate also has a bracket attached to it between the rectangular holes which also interfaces with the Mk 27 Mod 0 Fixture. The aft end plate is a rectangular shaped plate 1-3/8 inches thick and 2-3/4 inches wide, rounded at one end. The plate has one rectangular hole at the upper end to interface with the fixture and a 1-1/4 inch round hole at the lower end for tiedown access. The two plates are used simultaneously when testing the fixture. The test fixture is shown in figure 3-18.

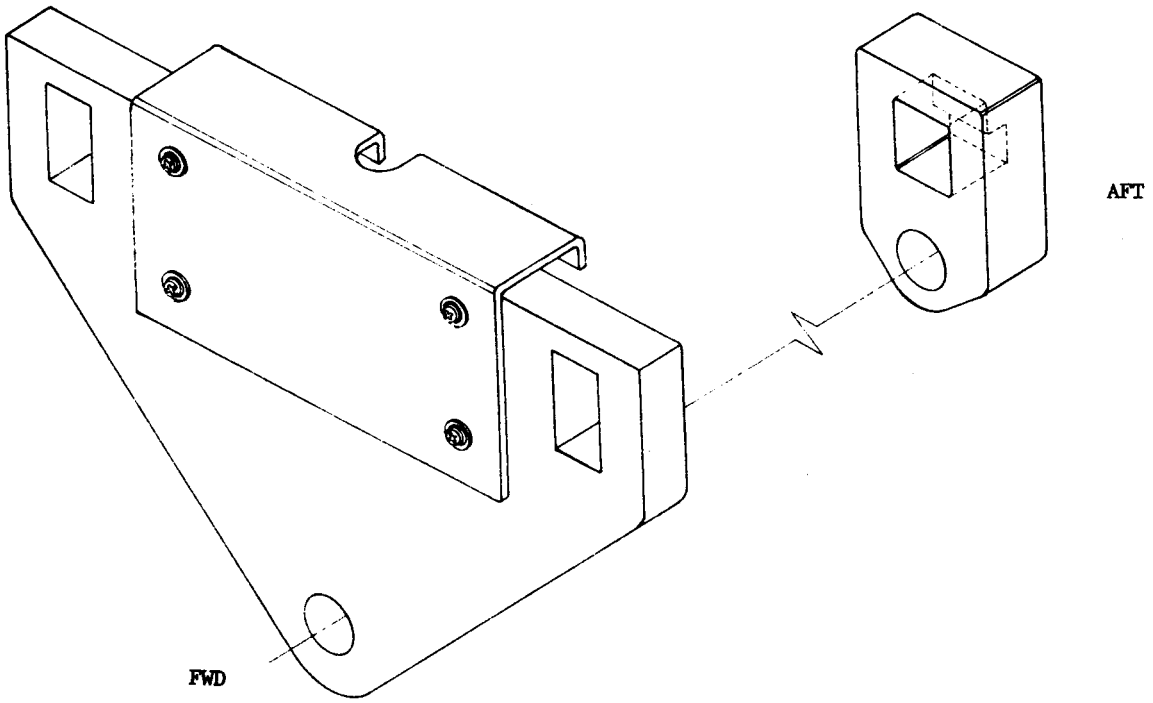

FIGURE 3-18. Mk 27 Mod 0 Lower Airframe Handling Fixture Test Fixture Set (Dwgs 6212950 & 6212951)

3-2.5.18. Fixture, Handling, Upper Airframe Mk 28 Mod 0 Test Fixture. The test fixture for the Mk 28 Mod 0 Upper Airframe Handling Fixture is an aluminum beam 35 inches long with a 5-1/4 inch wide guide, simulating a missile forward shoe, at one end and a cross bar, 15 inches wide, at the other end. The cross bar has one scalloped cut out on each side to accommodate the aft end of the Mk 28 Fixture. The test fixture is shown in figure 3-19.

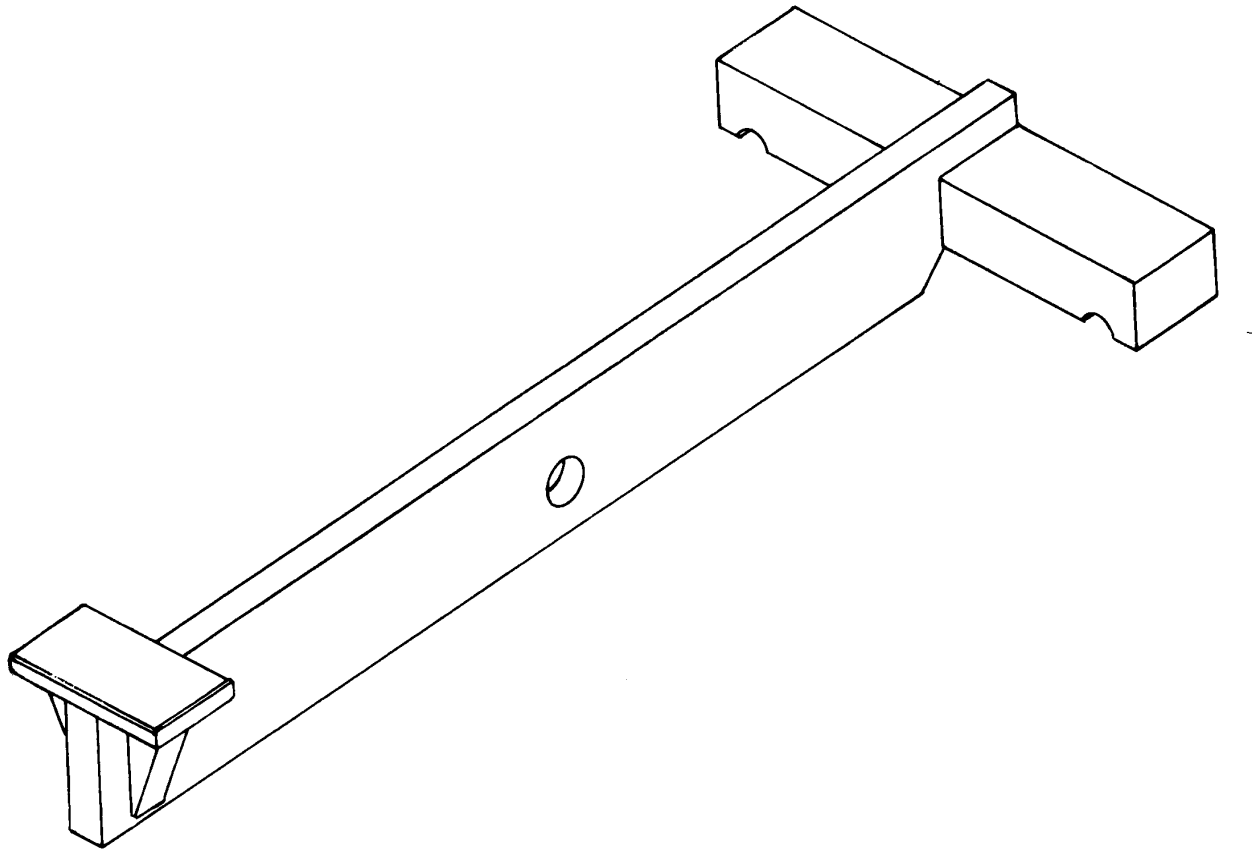

FIGURE 3-19. Mk 28 Mod 0 Upper Airframe Handling Fixture Test Fixture (Dwg 6212956)

3-2.5.19. Fixture, Handling, Thrust Vector Control (TVC) Mk 29 Mod 0 Test Fixture. The test fixture for the Mk 29 Mod 0 Thrust Vector Control (TVC) Handling Fixture is a steel plate 15 inches wide, 7 inches high, and 1 inch thick. The plate has an eye bolt threaded into the beam at the center. The eye bolt acts as a tiedown point during testing. The plate also has a threaded hole on each end which aligns with the two knobbed screws on the handling fixture. The test fixture is shown in figure 3-20.

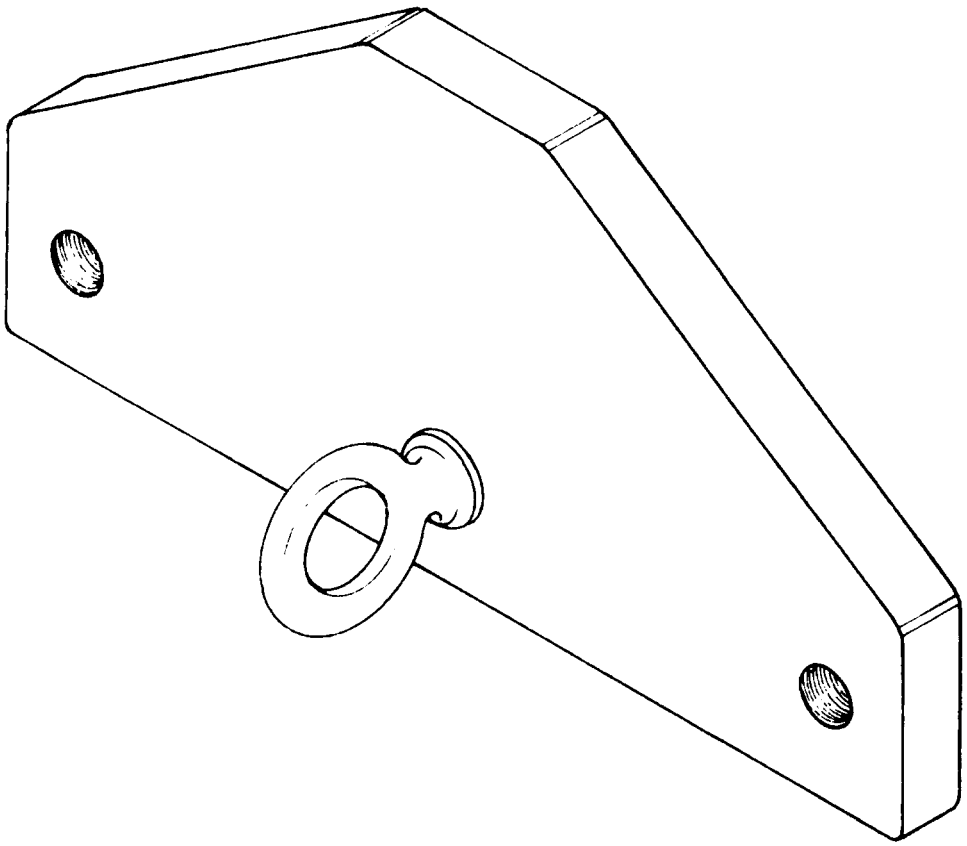

FIGURE 3-20. Mk 29 Mod 0 TVC Handling Fixture Test Fixture (Dwg 6212961)

3-2.5.20. Fixture, Test, Multi-Purpose. The Multi-Purpose Test Fixture consists of aluminum alloy channels with a fixed aluminum lifting eye located at the centerline. The fixture contains a set of hook adapters, connector adapters, shackles, safety hooks and carrier adapters that are adjustable to accommodate the testing of applicable handling equipment. The fixture is 52 inches long, 5.25 inches wide and 9.25 inches high (without adapters). The fixture is used to test the Mk 91 Mod 0, and Mk 176 Mod 0 Hook Adapters, Mk 4 Mod 0 Bomb Carrier, Mk 46 Mod 1 Mine Carrier, Mk 51 Mod 1 and Mk 55 Mod 1 Weapons Carriers, Mk 51 Mod 0 Connector and the Mk 85, Mk 86, Mk 87, and Mk 100 Mod 1 Pallet Slings. The test fixture is shown in figure 3-21

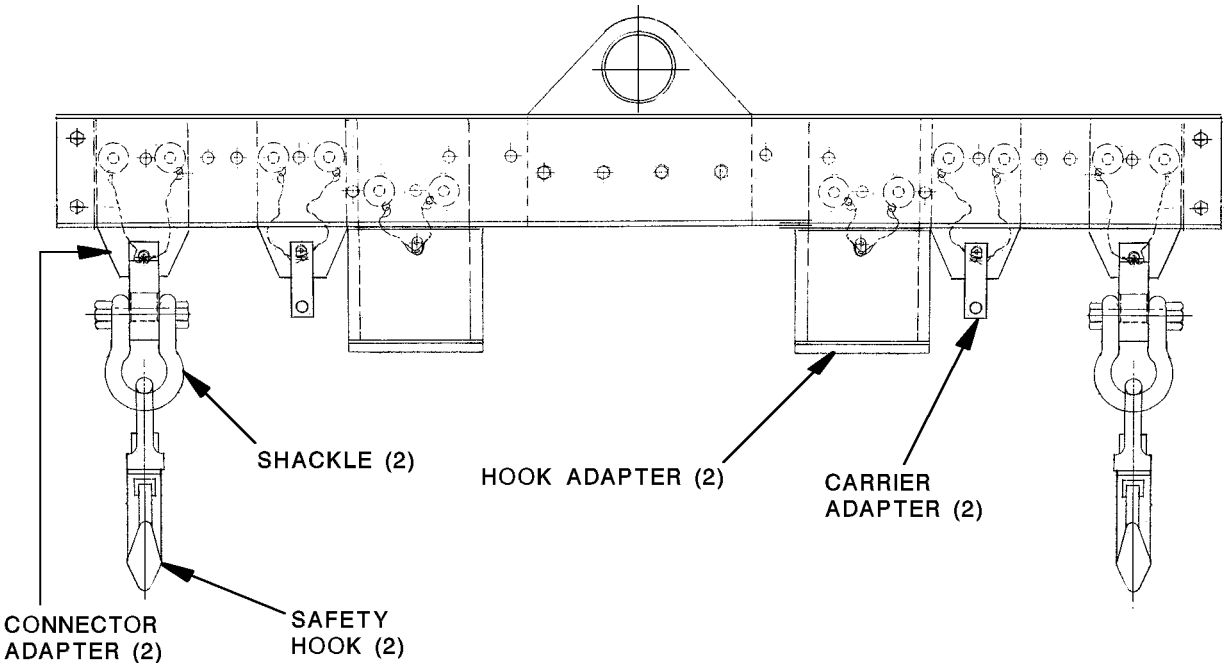

FIGURE 3-21. Multi-Purpose Test Fixture (Dwg. 6213365)

3-2.5.21. Strongback, Horizontal Transfer Assembly Mk 3 Mod 0 Upper Test Fixture. The fixture is constucted of steel channel with crossbeams welded at each end. A steel lift eye is welded at the top of the beam 25 inches from the forward end. Eyebolts are attached at each of the four ends of the crossbeams and act as attachment points to the Mk 3 Mod 0 Strongback's swivel shackles. Counterweights are welded on each side of the forward end crossbeams to aid in balancing. The beam is approximately 67 inches long and 36 inches wide. The test fixture is shown in figure 3-22.

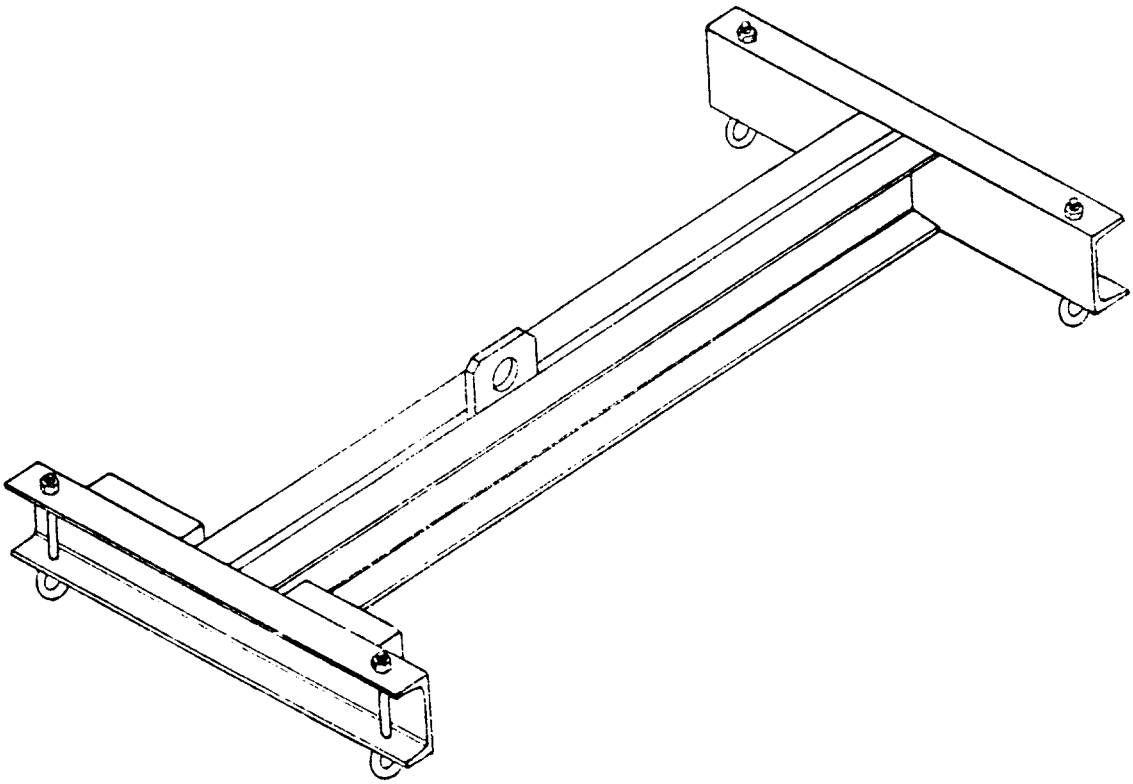

FIGURE 3-22. Mk 3 Mod 0 Horizontal Transfer Assembly Strongback Test Fixture (Dwg. 6213038)

3-2.5.22. Strongback, Horizontal Transfer Assembly Mk 3 Mod 0 Lower Test Fixture. The fixture is of steel construction with an arched steel rod welded to the bottom to act as a tiedown point. A steel plate with a 7/8" hole drilled in the center is welded at each end of the fixture to act as an engagement point with the stronback's pin assembly. The fixture is 25 inches long, 3 inches wide and is used in pairs to test one strongback. The test fixture is shown in figure 3-23.

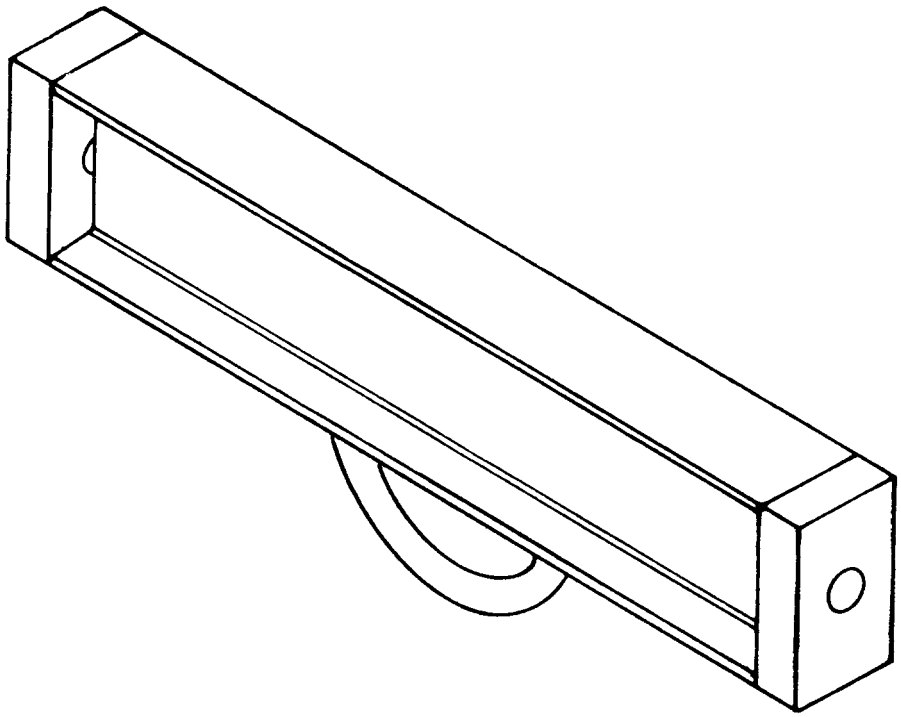

FIGURE 3-23. Mk 3 Mod 0 Horizontal Transfer Assembly Strongback Lower Test Fixture (Dwg. 6213039)

3-2.5.23. Strongback, Vertical Assembly Mk 4 Mod 0 Test Fixture. The test fixture for the Mk 4 Mod 0 Vertical Assembly Strongback is an aluminum beam 24.75 inches long by 2.25 inches wide by 9 inches high. The fixture has a link at each end of the beam to accept the lifting pins of the strongback during testing. The test fixture is shown in figure 3-24.

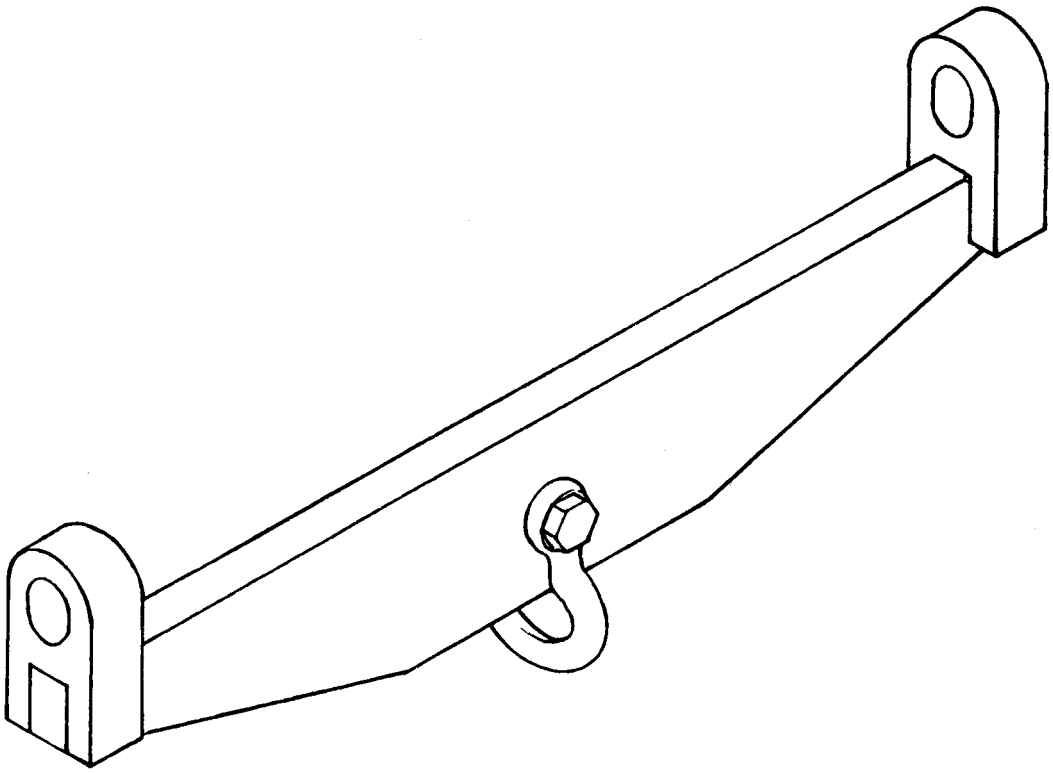

FIGURE 3-24. Mk 4 Mod 0 Vertical Assembly Strongback Test Fixture (Dwg 6213003)

3-2.5.24. Lifting Device, Gas Generator, JCM 17350 Test Fixture. The test fixture for the JCM 17350 Gas Generator Lifting Device is a multi-use fixture consisting of a steel weldment and a mechanically fastened eyebolt. The fixture is 9 1/2 inches long and 5 3/4 inches wide. The disc end of the fixture has two threaded holes for attachment to the lifting device. The eyebolt is installed into the threaded hole marked gas generator. The test fixture is shown in figure 3-25.

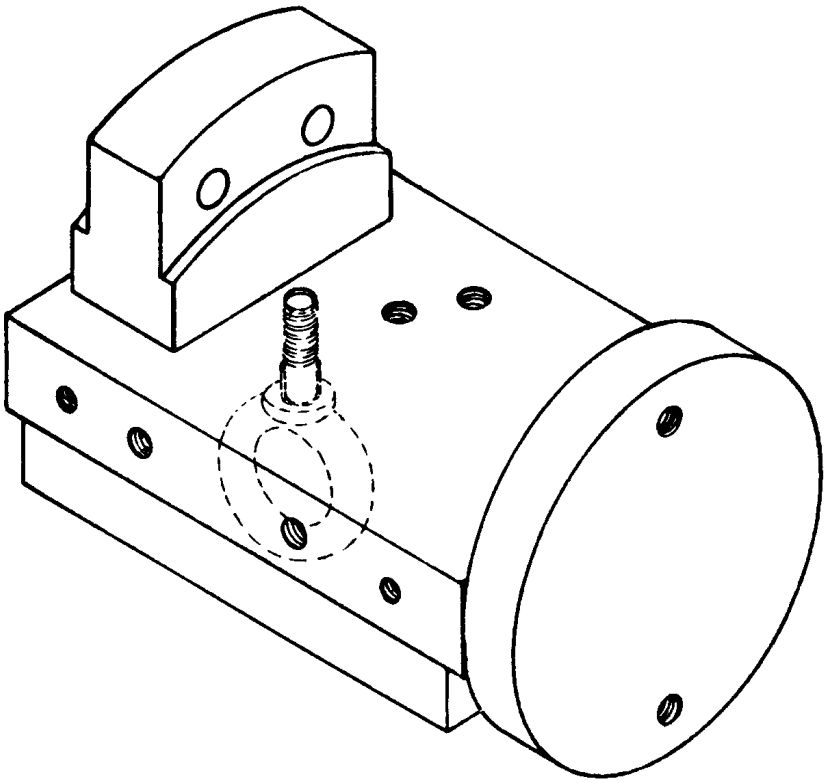

FIGURE 3-25. Gas Generator, Lifting Device Test Fixture (JCM-17769)

3-2.5.25. SLMM Test Fixture Assembly. The fixture is constructed of a two (2) inch thick aluminum plate that is approximately 21 inches by 17 inches. The plate has interfaces for ordnance handling equipment that is used with the Mk 67 Submarine Launched Mobile Mine, SLMM. The following four pieces of equipment interface with the fixture (1) Eyebolt, (2) Motor Puller, (3) Tail Cone Lifting Device, and (4) Battery Lifting Device. The test fixture is shown in figure 3-26.

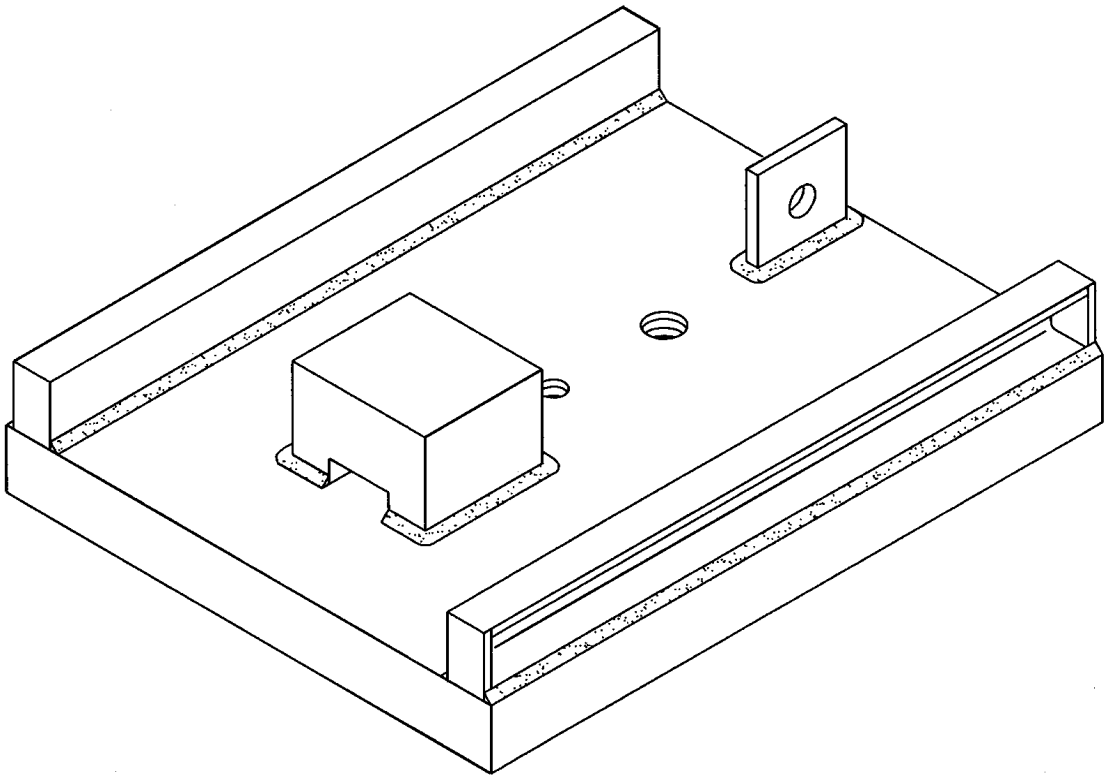

FIGURE 3-26. SLMM Test Fixture Assembly (Dwg 6213302)

3-2.5.26. Strongback, Cargo, STREAM, Heavy Lift Mk 5 Mod 1 Test Fixture. The test fixture for the Mk 5 Mod 1 Cargo STREAM Heavy Lift Strongback is an inverted "T" shaped steel weldment 13-1/2 inches long, 7 inches wide and 15-1/4 inches high. The fixture has four holes in the base and attaches to the strongback with four nuts and bolts. The hole in the vertical plate of the inverted "T" is used to apply the test load to the test fixture. The test fixture is also used for testing Mk 1 Mods Strongback. The test fixture is shown in figure 3-27.

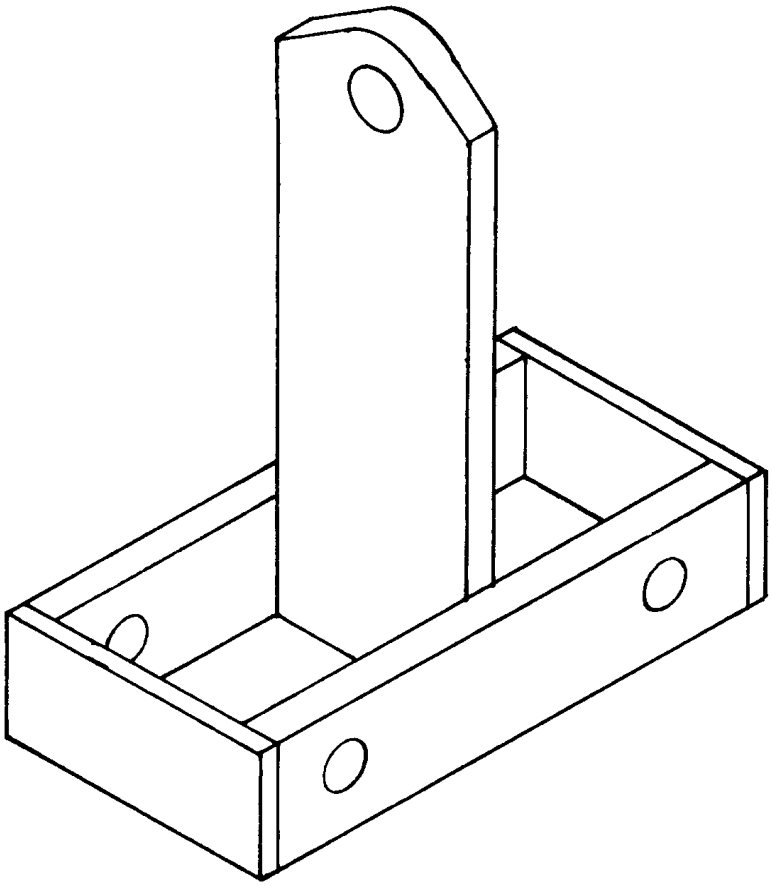

FIGURE 3-27. Strongback, Cargo, STREAM, Heavy Lift Mk 5 Mod 1 Test Fixture

3-3. TEST ARRANGEMENTS

The various ordnance handling equipments tested require different test setups, that is, the manner is which a test item should best be situated with respect to tiedown points, lift points, and use of a fixture, if required, to gain the desired results. Test arrangements are depicted diagrammatically, as shown is figure 3-28, with a simple sketch of the test item and fixture and schematic symbols representing test equipment components. For purposes of clarity, at times two views, side and end, of the test arrangement are shown. The test arrangement drawing also includes the SWL of the test item, the applied test load and the test duration. Certain beams, dollies, fixtures and strongbacks require more than one test, in which case the data for performing each are included on multiple test arrangements diagrams. All equipment are identified by their official nomenclature, DL/LD numbers, and national stock numbers.

SWL	TEST LOAD	TEST DURATION
1200 POUNDS	2400 POUNDS	2 MINUTES

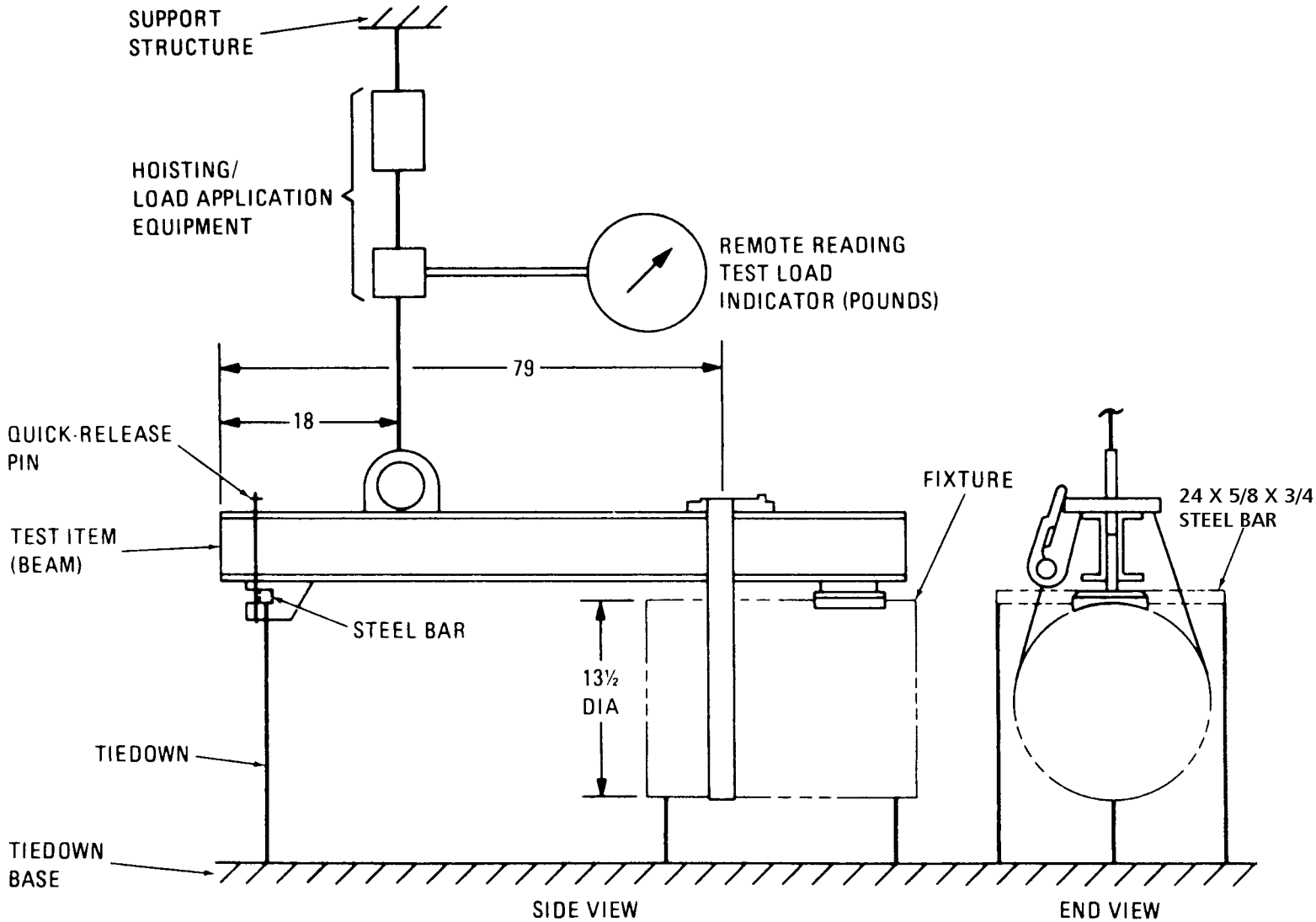

FIGURE 3-28. Typical Test Arrangement Diagram

This page left intentionally blank

CHAPTER 4

ARRANGEMENTS FOR PERIODIC TESTING OF ORDNANCE HANDLING EQUIPMENT

4-1. INTRODUCTION

The ordnance handling equipment covered in this publication comprises the following basic types:

a. ADAPTERS; Section I

b. BANDS; Section II

c. BEAMS; Section III

d. BOOMS; Section IV

e. CARRIERS; Section V

f. DOLLIES; Section VI

g. FIXTURES; Section VII

h. GANTRIES; Section VIII

i. SLINGS; Section IX

j. STRONGBACKS; Section X

k. MISCELLANEOUS; Section XI

Divided into sections, one for each type of handling equipment, this chapter provides instructions, test data, and test arrangements for each item of handling equipment. Tables containing quick-reference data for the handling equipment are included as are test arrangement diagrams. Each diagram illustrates the arrangement for attaching the test item to the test equipment with or without test fixtures, as required, and includes the test item's safe working load (SWL), test load, and test duration (length of time test load is applied).

NOTE

In accordance with the requirements of NAVSEA OP 4 and OP 5, all ordnance handling equipment requiring periodic testing shall be tested at least once every four years.

Section I

ADAPTERS

4-2. GENERAL

Adapters requiring testing are listed in table 4-1 with cross references to their drawing/ DL/LD numbers; test arrangement figure number; maintenance index page (MIP) number/ Intermediate and Depot Maintenance Instructions, OR-99/XXXXXXX; weight; rated SWL; applied test load and test duration of items used both ashore and aboard ship. Prior to testing, each adapter shall be visually inspected to locate obvious defects that would be cause for rejection, thus preventing the occurrence of a dangerous situation resulting from failure during testing. Accessory fittings and hardware that do not comply with applicable drawings or specifications or loose or missing parts shall be cause for rejection. Before, during, and after testing adapters, the precautions included in paragraphs 2-5.1, 2-5.2, and 2-5.3 shall be observed.

Table 4-1. Quick Reference Data, Adapters

ITEM NOMENCLATURE	DRAWING OR DL/LD	FIGURE NO.	MIP NO. OR OR-99/	ITEM WEIGHT (LBS)	SAFE WORKING LOAD (LBS)	TEST LOAD (LBS)	TEST DURATION (MIN.)
Adapter, Hook, Mk 91 Mod 0	DL 2643315	4-1	7721/R05	33.5	6,000	7,200	2
Adapter, Missile Hoisting, Mk 151 Mod 0	LD 497908	4-2	7221/R07	35	1,200	2,400	2
Adapter, Sill Lift, Mk 166 Mod 0	PL 5599994-19	4-3	7221/R11	32.17	219	438	2
Adapter, Lifting, Assembly, Mk 169 Mod 0	JCM-14669	4-4 (1) 4-4 (2)	7221/CLS	500	*3,175 #17,000	*3,810 #20,400	*2 #2
Adapter, Hook, Mk 176 Mod 0	DL 6213621	4-5	7221/R08	38	7,500	9,000	2
Adapter, Eyebolt	MMC 1B00509	4-6			760	912	2
Adapter, Eyebolt	MMC 1B00513	4-7			2,500	5,000	2

* Test No. 1

\# Test No. 2

NOTE: Test frequency columns have been deleted in accordance with paragraph 4-1.

ADAPTER, HOOK,
MK 91 MOD 0
DL 2643315
NSN 9C 1450-00-250-8822

SWL	TEST LOAD	TEST DURATION
6,000 POUNDS	7,200 POUNDS	2 MINUTES

NOTE

Refer to chapter 3 for test fixture illustration and description.

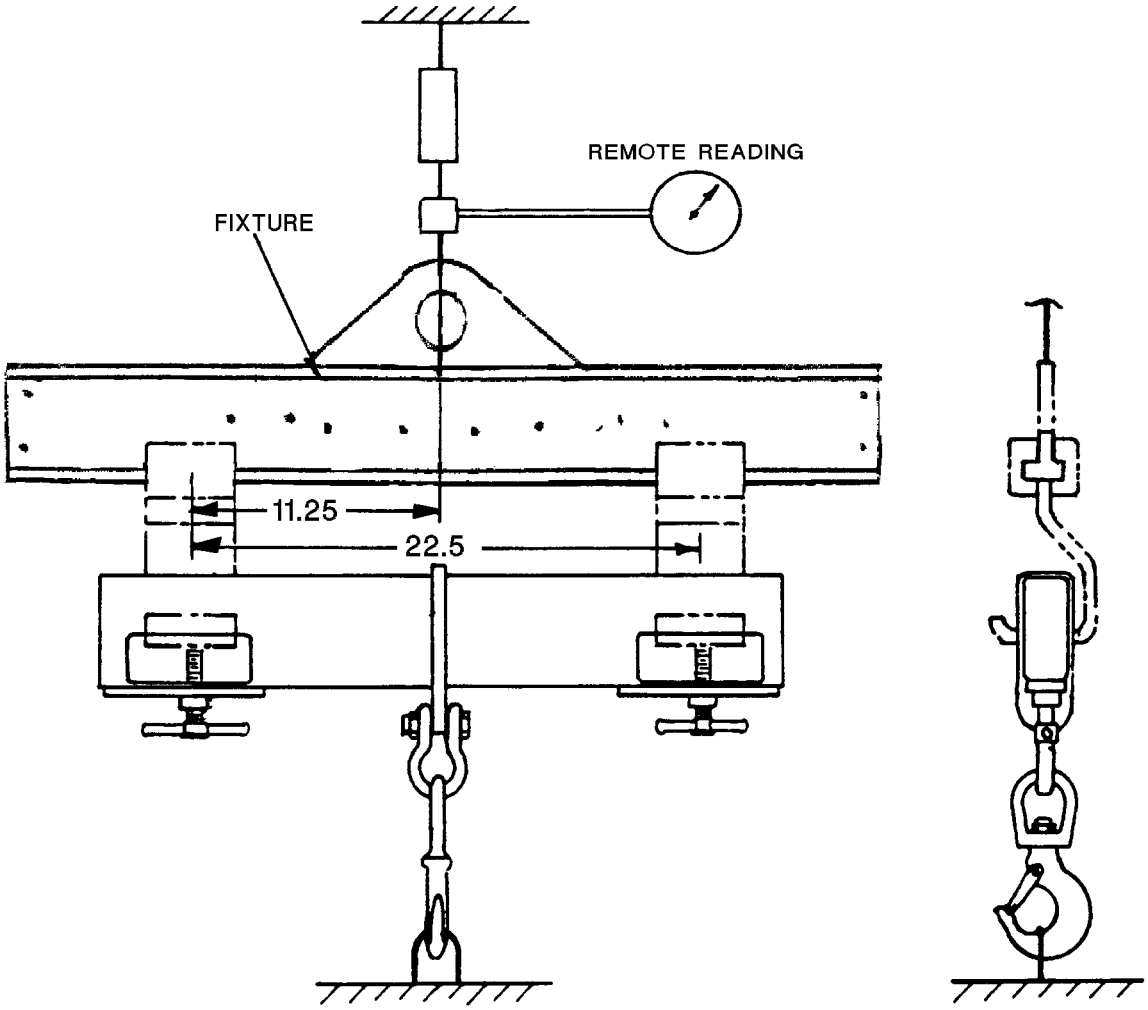

FIGURE 4-1. Test Arrangement, Hook Adapter, Mk 91 Mod 0

ADAPTER, MISSILE HOISTING,
MK 151 MOD 0
LD 497908
NSN 9C 4921-00-777-5604

SWL	TEST LOAD	TEST DURATION
1,200 POUNDS	2,400 POUNDS	2 MINUTES

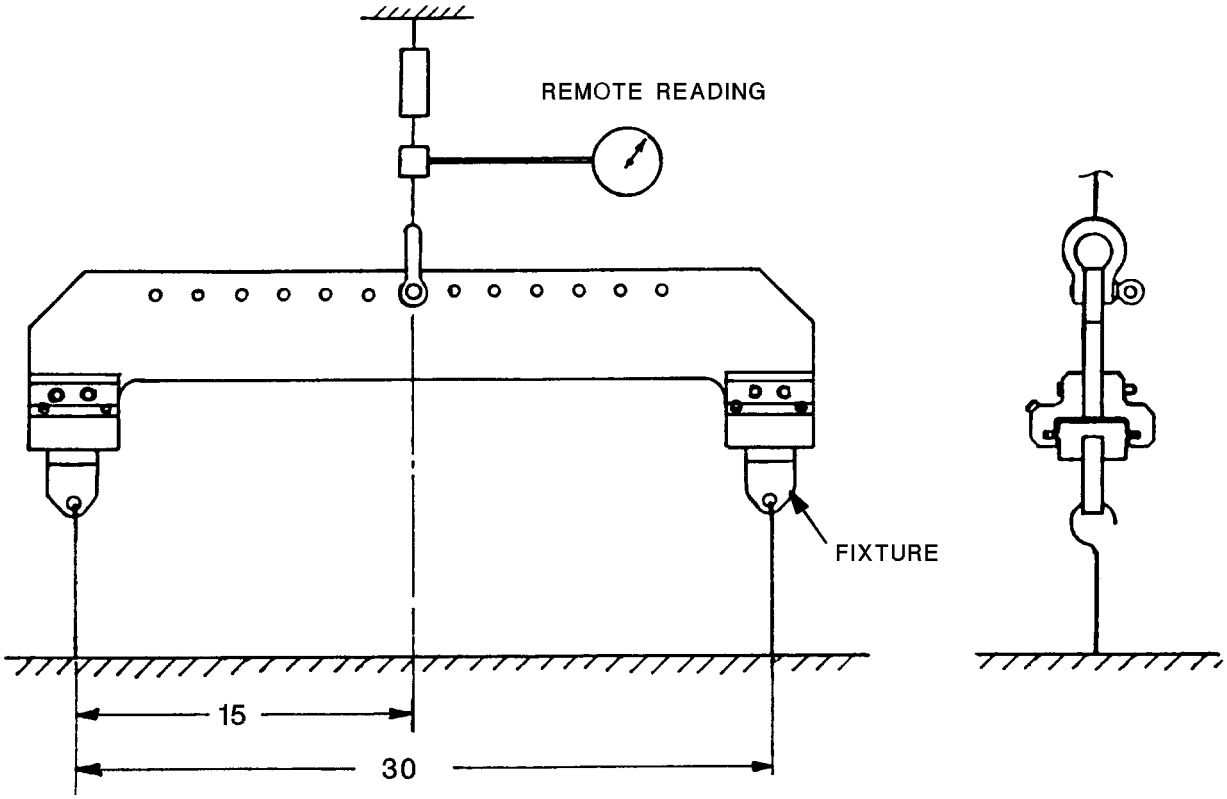

FIGURE 4-2. Test Arrangement, Missile Hoisting Adapter, Mk 151 Mod 0

ADAPTER, SILL LIFT,
MK 166 MOD 0
PL 5599994-19
NSN 8T 1450-01-262-1148

SWL	TEST LOAD	TEST DURATION
219 POUNDS	438 POUNDS	2 MINUTES

NOTE

Refer to chapter 3 for test fixture illustration and description.

NOTE

"-9" variants are to be ORDALTED to "-19" prior to weight test. Contact PHST Center, Naval Surface Warfare Center Indian Head Division, Det Earle for further information if needed.

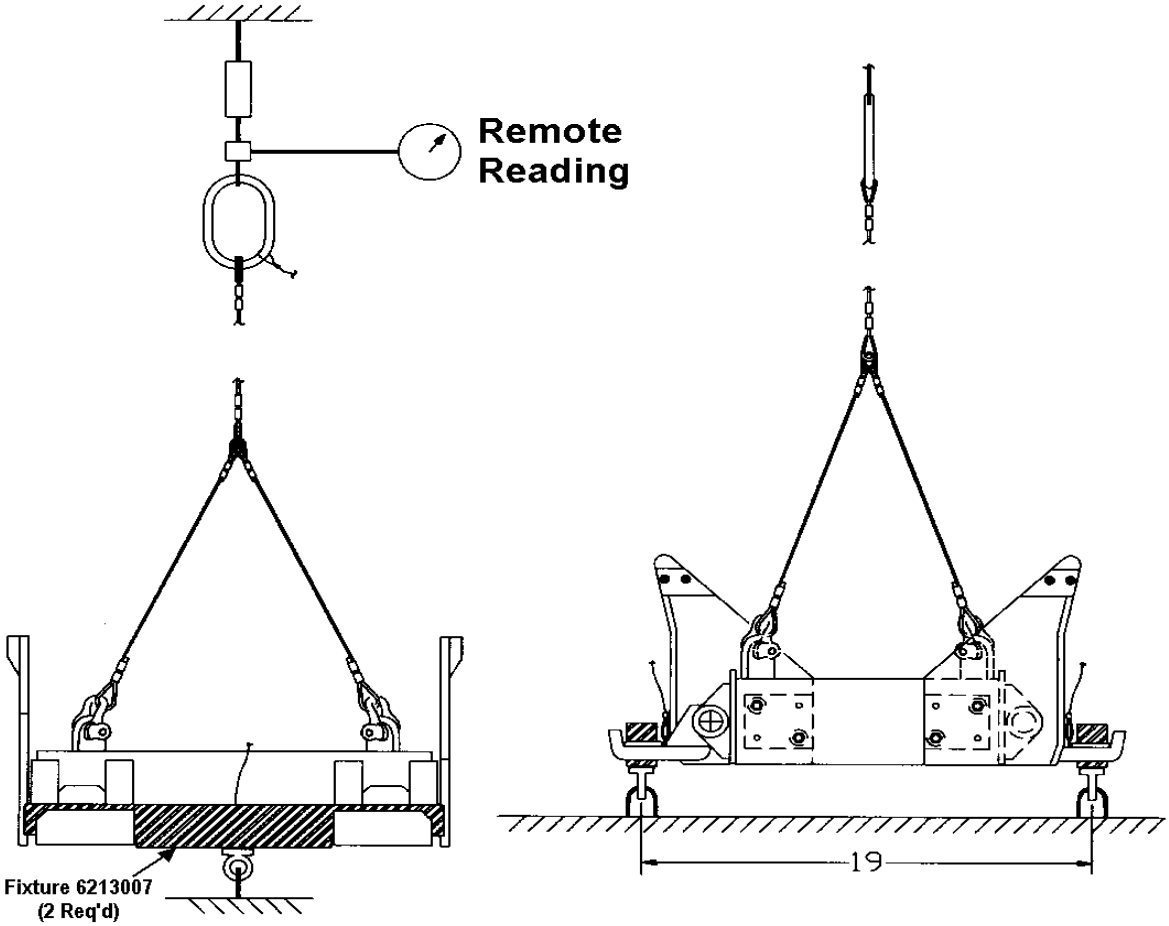

FIGURE 4-3. Test arrangement, Sill Lift Adapter, Mk 166 Mod 0

ADAPTER, LIFTING, ASSEMBLY
MK 169 MOD 0
DWG. JCM-14669
NSN TO BE DETERMINED

TEST NO.	SWL	TEST LOAD	TEST DURATION
1	3,175 POUNDS	3,810 POUNDS	2 MINUTES
2	17,000 POUNDS	20,400 POUNDS	2 MINUTES

NOTE

Refer to chapter 3 for test fixture illustration and description.

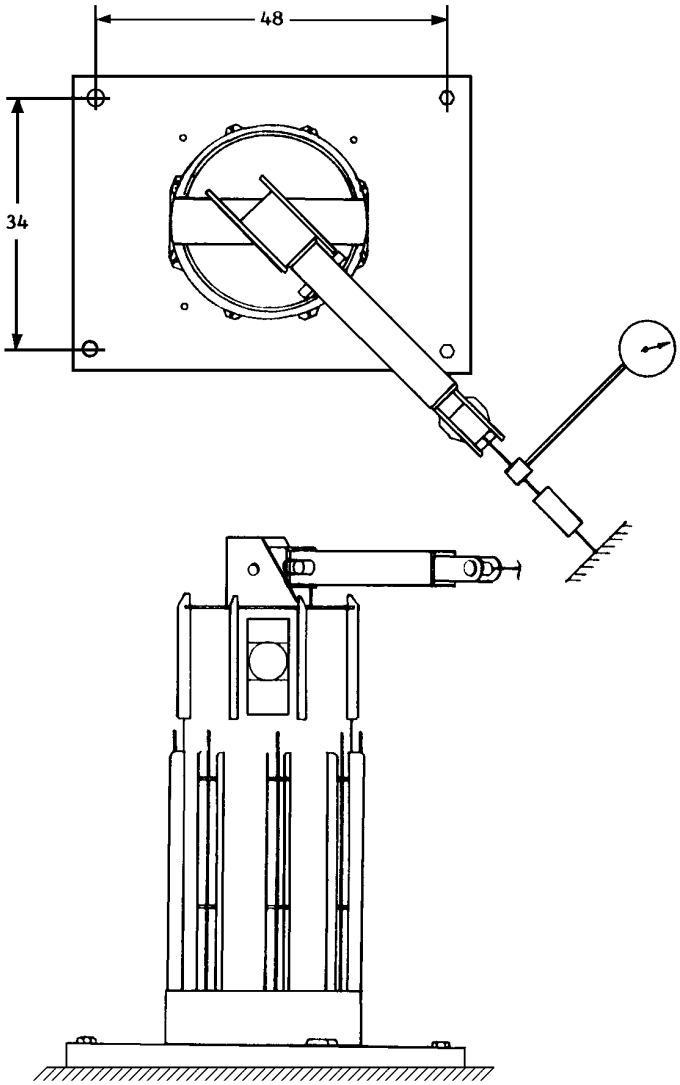

Test No. 1 - Horizontal

FIGURE 4-4. Test Arrangement, Adapter, Lifting Assembly, Mk 169 Mod 0 (Sheet 1 of 2)

ADAPTER, LIFTING, ASSEMBLY
MK 169 MOD 0
DWG. JCM-14669
NSN TO BE DETERMINED

TEST NO.	SWL	TEST LOAD	TEST DURATION
1	3,175 POUNDS	3,810 POUNDS	2 MINUTES
2	17,000 POUNDS	20,400 POUNDS	2 MINUTES

NOTE

Refer to chapter 3 for test fixture illustration and description.

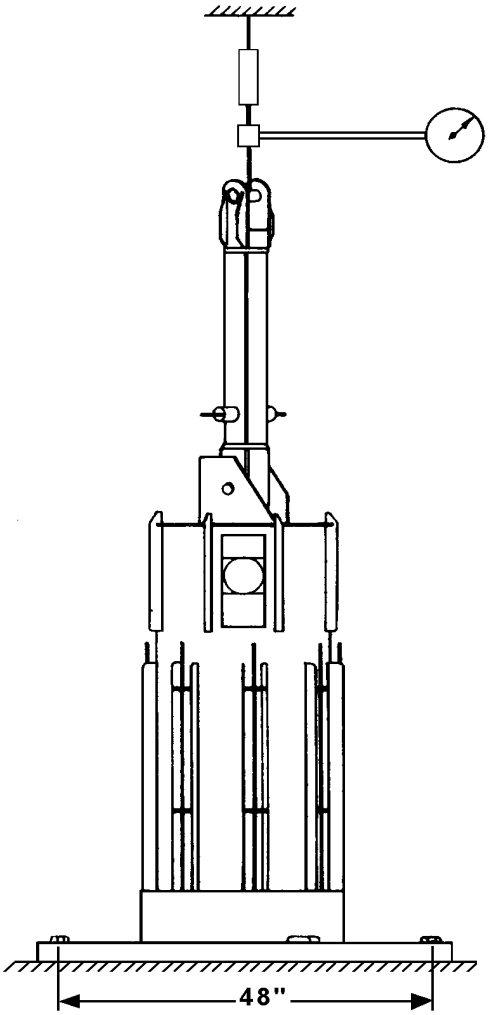

Test No. 2 - Vertical

FIGURE 4-4. Test Arrangement, Adapter, Lifting Assembly, Mk 169 Mod 0 (Sheet 2 of 2)

ADAPTER, HOOK
MK 176 MOD 0
DL 6213621
NSN 9Z 3940-01-443-3580

SWL	TEST LOAD	TEST DURATION
7,500 POUNDS	9,000 POUNDS	2 MINUTES

NOTE

Refer to chapter 3 for test fixture illustration and description.

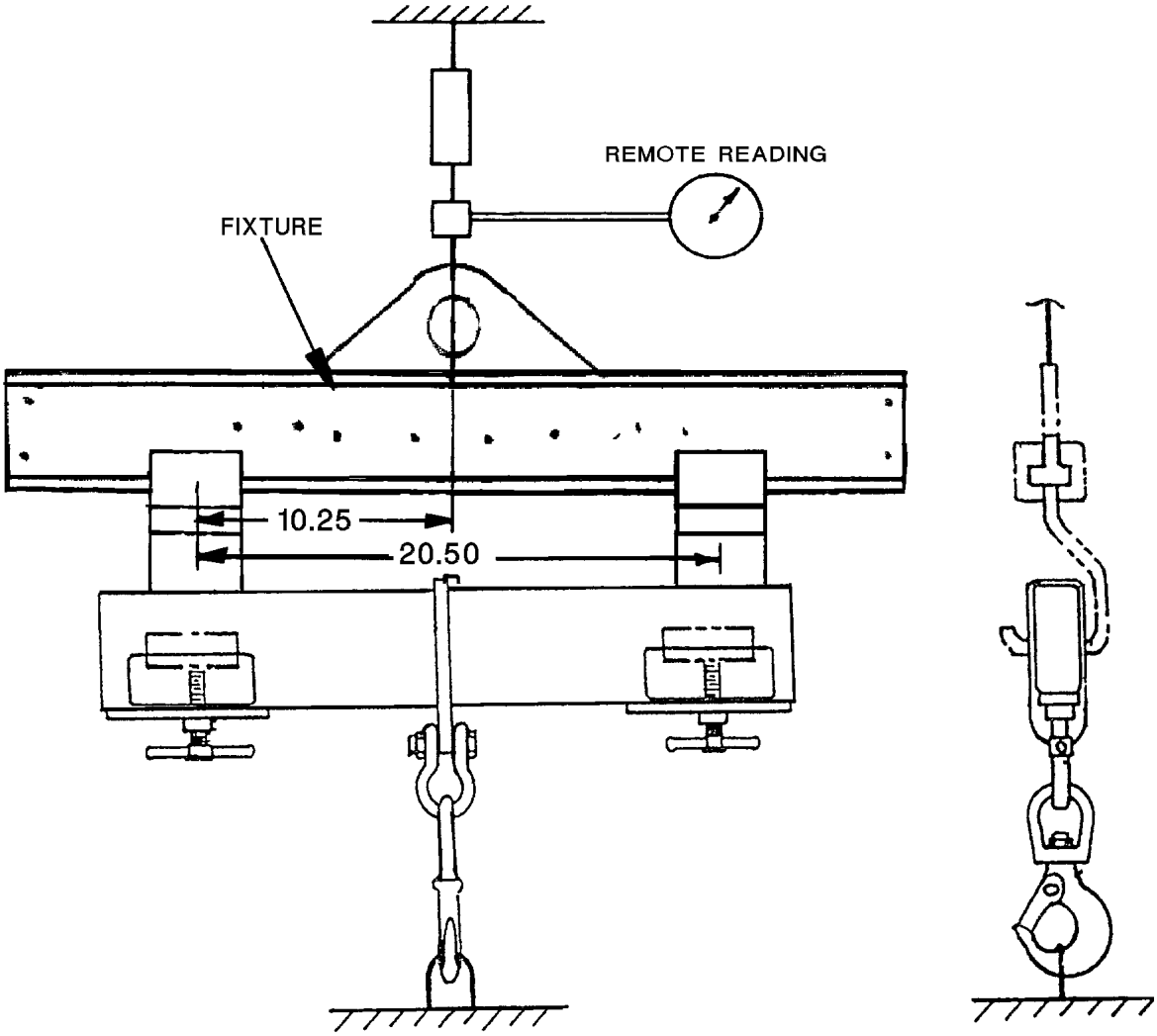

FIGURE 4-5. Test Arrangement, Adapter, Hook, Mk 176 Mod 0

ADAPTER, EYEBOLT
(MMC 1B00509)
NSN 9Z 5306-00-926-5593

SWL	TEST LOAD	TEST DURATION
760 POUNDS	912 POUNDS	2 MINUTES

NOTE

Refer to chapter 3 for test fixture illustration and description.

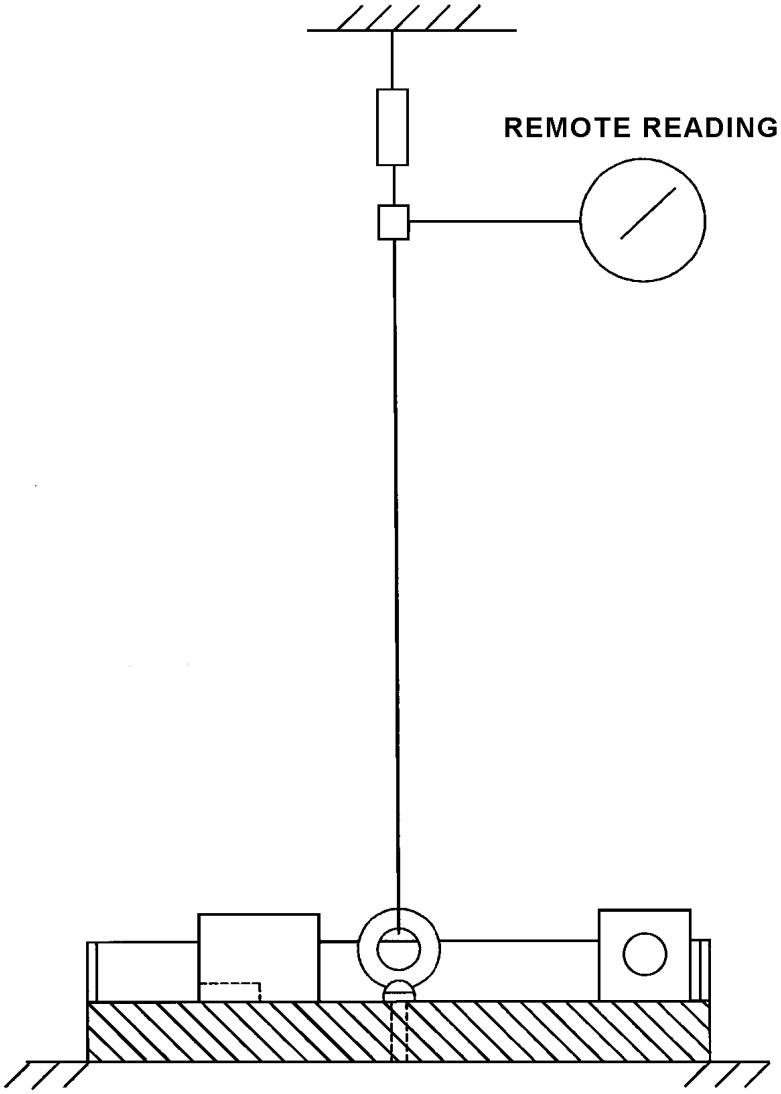

FIGURE 4-6. Test Arrangement, Adapter, Eyebolt, (MMC 1B00509)

ADAPTER, EYEBOLT
(MMC 1B00513)
NSN 9Z 5306-00-926-5594

SWL	TEST LOAD	TEST DURATION
2,500 POUNDS	5,000 POUNDS	2 MINUTES

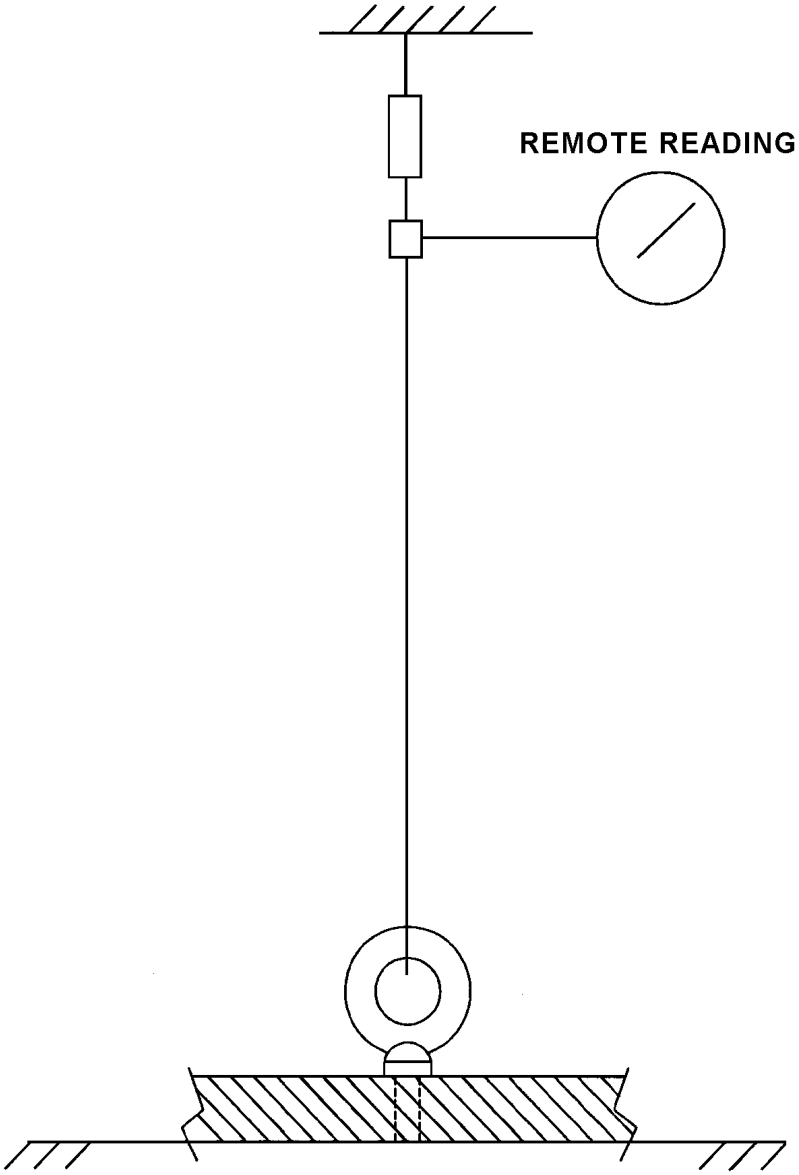

FIGURE 4-7. Test Arrangement, Adapter, Eyebolt, (MMC 1B00513)

Section II

BANDS

4-3. GENERAL

Bands requiring testing are listed in table 4-2 with cross references to their drawing/DL/LD number; test arrangement figure numbers; maintenance index page (MIP) number/Intermediate and Depot Maintenance Instructions, OR-99/xxxxxxx; weight; rated SWL, applied test load and test duration of items used both ashore and aboard ship. Prior to testing, each band shall be visually inspected to locate obvious defects that would be cause for rejection, thus preventing the occurrence of a dangerous situation. Inspect the jaws for cracks in the area of the hinge pins; tensioning cables with broken and abraded strands, kinks, and sharp bends are cause for rejection. Before, during, and after testing bands, the precautions included in paragraphs 2-5.1, 2-5.2, and 2-5.3 shall be observed.

Table 4-2. Quick Reference Data, Bands

ITEM NOMENCLATURE	DRAWING OR DL/LD	FIGURE NO.	MIP NO. OR OR-99/	ITEM WEIGHT (LBS)	SAFE WORKING LOAD (LBS)	TEST LOAD (LBS)	TEST DURATION (MIN.)
Band, Handling, Mk 79 Mod 1	DL 1448529	4-8	7221/R22	41	1,000	2,000	2
Band, Handling, Mk 81 Mod 0	LD 484331	4-9	7221/R23	43	2,100	4,200	2

NOTE: Test frequency columns have been deleted in accordance with paragraph 4-1.

BAND, HANDLING,
MK 79 MOD 1
DL 1448529
NSN 8T 1450-00-937-2445

SWL	TEST LOAD	TEST DURATION
1,000 POUNDS	2,000 POUNDS	2 MINUTES

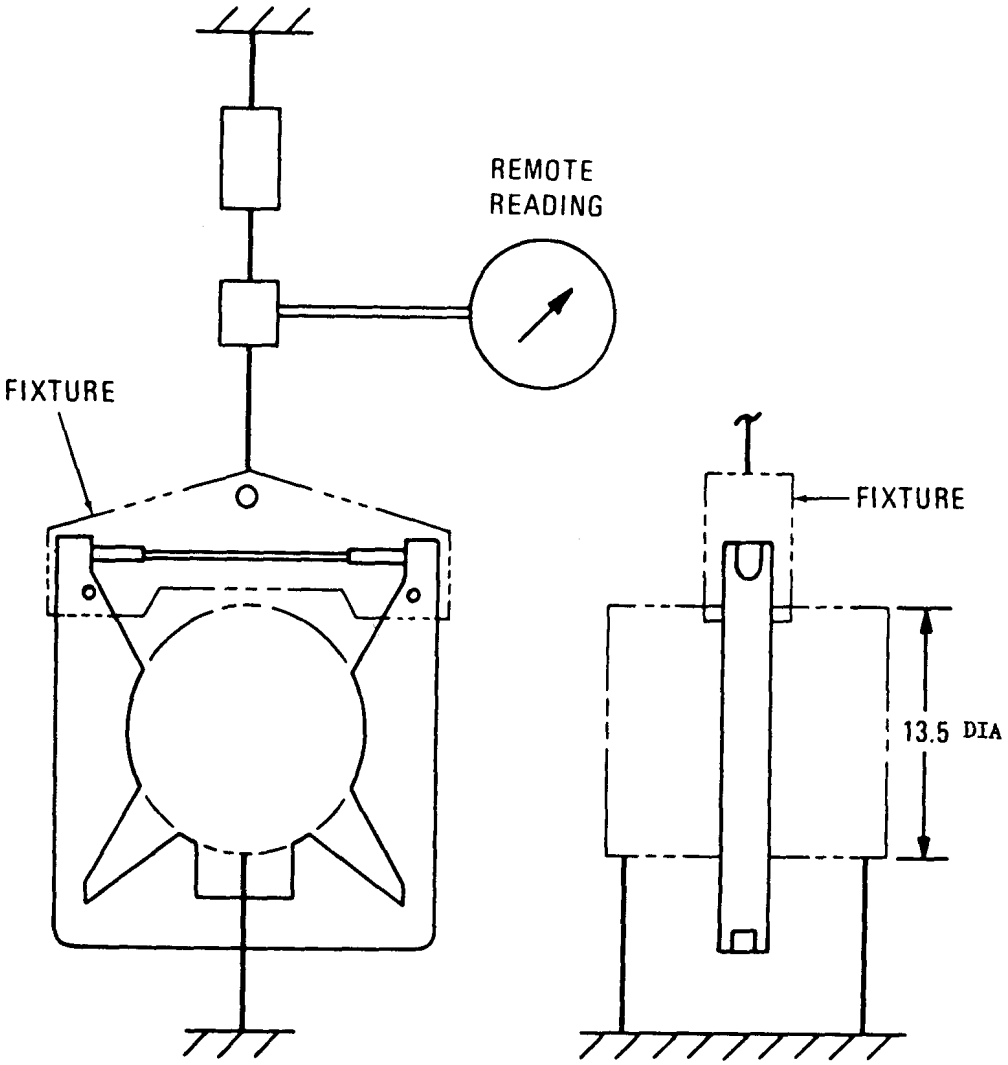

FIGURE 4-8. Test Arrangement, Handling Band, Mk 79 Mod 1

BAND, HANDLING,
MK 81 MOD 0
LD 484331
NSN 8T 1450-00-679-4628

SWL	TEST LOAD	TEST DURATION
2,100 POUNDS	4,200 POUNDS	2 MINUTES

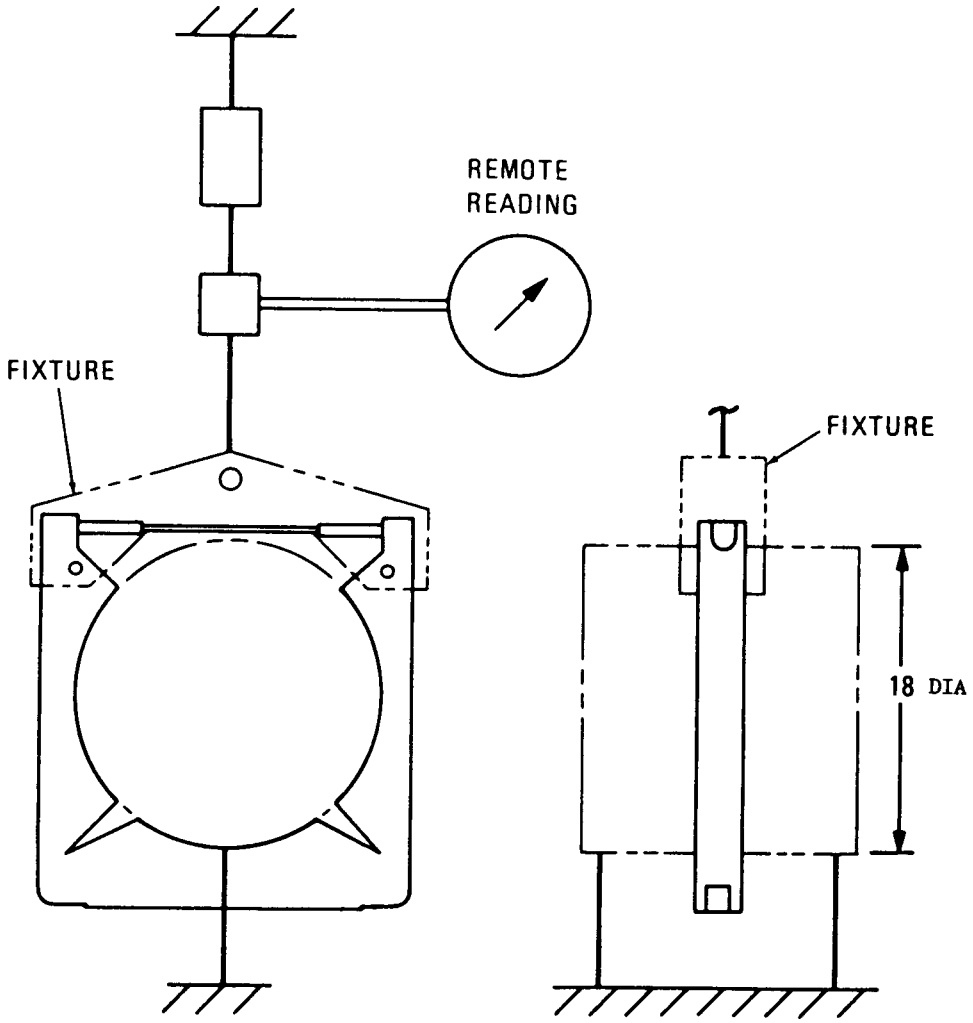

FIGURE 4-9. Test Arrangement, Handling Band, Mk 81 Mod 0

Section III

BEAMS

4-4. GENERAL

Beams requiring testing are listed in table 4-3 with cross references to their drawing/DL/LD numbers; test arrangement figure numbers; maintenance index page (MIP) number/Intermediate and Depot Maintenance Instructions, OR-99/xxxxxxx; weight; rated SWL; applied test load and test duration of items used both ashore and aboard ship. Prior to testing, each beam shall be visually inspected to locate obvious defects that would be cause for rejection, thus preventing the occurrence of a dangerous situation. Accessory fittings and hardware (safety hooks, chain links, wire rope or cables, lifting eyes, quick-release pins, etc.) that are damaged or do not comply with applicable drawings and specifications, or loose or missing parts shall be cause for rejection. Before, during, and after testing beams, the precautions included in paragraphs 2-5.1, 2-5.2, and 2-5.3 shall be observed.

Table 4-3. Quick Reference Data, Beams

ITEM NOMENCLATURE	DRAWING OR DL/LD	FIGURE NO.	MIP NO. OR OR-99/	ITEM WEIGHT (LBS)	SAFE WORKING LOAD (LBS)	TEST LOAD (LBS)	TEST DURATION (MIN.)
Beam, Hoisting, Mk 4 Mod 2	DL 5167158	4-10	8-159	37.5	1,600	1,920	2
Beam, Hoisting, Mk 5 Mod 2	DL 5167159	4-11	7222/R25	85	1,600	1,920	2
Beam, Hoisting, Guided Missile, Mk 9 Mod 0	DL 2066630	4-12	7221/R44	280	3,700	7,400	2
Beam, Hoisting, Booster, Mk 10 Mod 0	DL 2066638	4-13	7221/R30	81	4,500	9,000	2
Beam, Hoisting, Guided Missile, Mk 15 Mod 2	DL 6213402	4-14	7721/R36	89	2,400	4,800	2
Beam, Handling, Mk 18 Mod 0	DL 2642681	4-15	7721/R10	43	4,000	8,000	2
Beam, Handling, Mk 18 Mod 1	DL 2643881	4-16	7721/R11	69	4,000	8,000	2
Beam, Handling, Mk 19 Mod 1	DL 2643876	4-17 (1) 4-17 (2)	7721/R14	118	*5,000 #4,000	10,000 8,000	2 2
Beam, Handling, Mk 21 Mod 0	DL 2642626	4-18		130	5,000	10,000	2
Beam, Handling, Mk 22 Mod 0	DL 1330641	4-19	7222/R15	45	1,800	3,600	2
Beam, Hoisting, Mk 24 Mod 0	DL 2643825	4-20	7222/R38	9.4	550	1,100	2
Beam, Low Overhead Lift, HARPOON Canisters, Mk 30 Mod 0	DL 5166042	4-21	86HR000	83	2,150	2,580	2
Beam, Low Overhead Lift, HARPOON Canisters Mk 30 Mod 1	DL 5167255	4-22		87	5,000	6,000	2

* Test No. 1

\# Test No. 2

NOTE: Test frequency columns have been deleted in accordance with paragraph 4-1.

Table 4-3. Quick Reference Data, Beams (Continued)

ITEM NOMENCLATURE	DRAWING OR DL/LD	FIGURE NO.	MIP NO. OR OR-99/	ITEM WEIGHT (LBS)	SAFE WORKING LOAD (LBS)	TEST LOAD (LBS)	TEST DURATION (MIN.)
Beam, Hoist Rotation, Mk 31 Mod 1	DL 5166660	4-23	7221/R40	117	2,150	4,300	2
Beam, Hoist Rotation, Mk 31 Mod 2	DL 5167237	4-24	7221/R41	140	4,500	9,000	2
Beam, Hoist Rotation, Mk 31 Mod 3	DL 6213442	4-25	7221/R41	146	4,500	9,000	2
Beam, Lift, Mk 32 Mod 0	DL 5166233	4-26	86HS000	60	1,300	1,560	2
Beam, Lift, Mk 33 Mod 0	DL 5166505	4-27	86HS000	60	500	600	2
Beam, Lift, Mk 34 Mod 0	DL 5166502	4-28	86HS000	60	1,600	1,920	2
Beam, Lift, Mk 35 Mod 0	DL 5166503	4-29	86HS000	60	1,600	1,920	2
Beam, Lift, Mk 36 Mod 0	DL 5166473	4-30	86HS000	35	1,500	1,800	2
Beam, Lift, Mk 37 Mod 0	DL 5166501	4-31	86HS000	35	1,200	1,440	2
Beam, Lift, Mk 37 Mod 1	DL 6212913	4-32 (1) 4-32 (2)	86HS000	35	1,450	1,740	2
Beam, Lift, Mk 38 Mod 0	DL 5166504	4-33	86HS000	60	2,500	3,000	2
Beam, Lift, Mk 40 Mod 0	DL 5166639	4-34	86HS000	17	550	660	2
Beam, Lift, Mk 41 Mod 0	DL 5166647	4-35	86HS000	17	300	360	2
Beam, Dockside Loading, Mk 43 Mod 0	DL 5167502	4-36	7221/R32	248	4,000	8,000	2
Beam, Lift, Mk 44 Mod 0	DL 5167164	4-37	7221/R42	50	4,500	9,000	2
Beam, Encanistered AUR, Hoisting, Mk 45 Mod 0	DL 5167233	4-38	86B4000	390	4,000	8,000	2

NOTE: Test frequency columns have been deleted in accordance with paragraph 4-1.

Table 4-3. Quick Reference Data, Beams (Continued)

ITEM NOMENCLATURE	DRAWING OR DL/LD	FIGURE NO.	MIP NO. OR OR-99/	ITEM WEIGHT (LBS)	SAFE WORKING LOAD (LBS)	TEST LOAD (LBS)	TEST DURATION (MIN.)
Beam, AUR Container Hoisting, Mk 46 Mod 0	DL 5167804	4-39	7221/R34	375	7,000	14,000	2
Beam, Container Handling, Mk 49 Mod 0	DL 5167620	4-40		65	1,000	1,200	2
Beam, Canister Adapter Lift, Mk 50 Mod 0	PL 5599196-9	4-41	7221/R31	24	650	1,300	2
Beam, Vertical Launch ASROC Missile, Hoisting, Mk 51 Mod 0	DL 6204876	4-42	85E6000	40	1,750	3,500	2
Beam, Container Handling, Mk 52 Mod 0	DL 6212876	4-43	7521/R11	6	2,000	2,400	2
Beam, Container Handling, Mk 52 Mod 1	DL 6213893	4-44		6	2,000	2,400	2
Beam, Warhead Lift, Mk 53 Mod 0	DL 6212934	4-45		5	85	102	2
Beam, Slam Guidance Section, Mk 54 Mod 0	DL 6212818	4-46	None	19	400	480	2
Beam, Mine Neutralization Vehicle, Mk 56 Mod 0	DL 6212996	4-47	7321/R10	45	3,100	6,200	2
Beam, Booster Lift, Mk 57 Mod 0	DL 6213111	4-48	86J4000	83.75	1,570	1,884	5
Beam, Upper Stage SM-2 BLK IV, Mk 58 Mod 0	DL 6213086	4-49	86J6000	90	1,800	2,160	5
Beam, Guidance Section, Mk 60 Mod 0	DL 6213342	4-50	86J5000	15.25	300	600	5
Beam, Hoisting DTRM, Mk 61 Mod 0	DL 6213300	4-51	86D9000	48	1,100	1,320	2

Table 4-3. Quick Reference Data, Beams (Continued)

ITEM NOMENCLATURE	DRAWING OR DL/LD	FIGURE NO.	MIP NO. OR OR-99/	ITEM WEIGHT (LBS)	SAFE WORKING LOAD (LBS)	TEST LOAD (LBS)	TEST DURATION (MIN.)
Beam, Mk 62 Mod 0	DL 6213706	4-52	86J9000	12	200	240	2

NOTE: Test frequency columns have been deleted in accordance with paragraph 4-1.

BEAM, HOISTING,
MK 4 MOD 2
DL 5167158
NSN 8T 1450-01-200-8189

SWL	TEST LOAD	TEST DURATION
1,600 POUNDS	1,920 POUNDS	2 MINUTES

NOTE

Refer to chapter 3 for test fixture illustration and description.

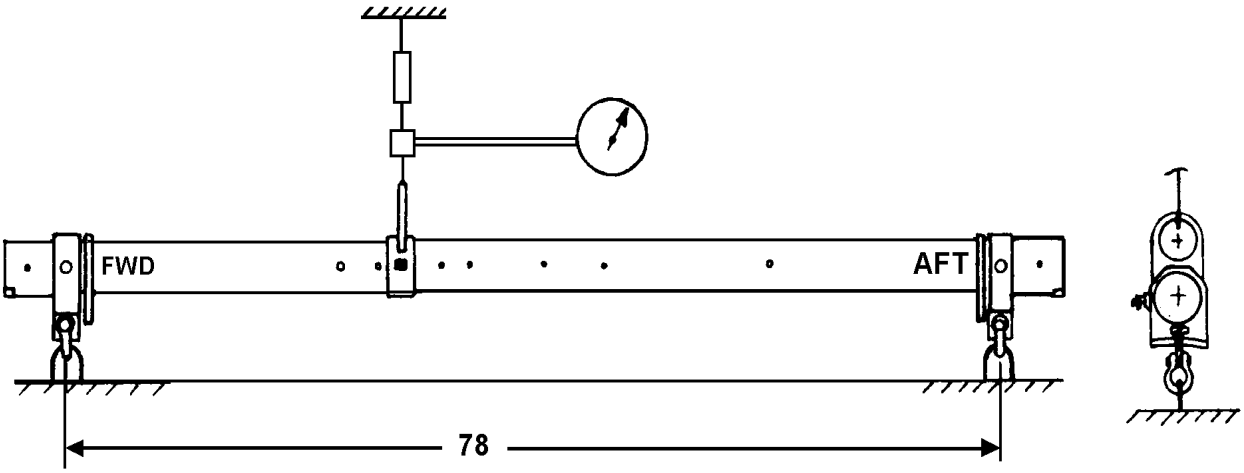

FIGURE 4-10. Test Arrangement, Hoisting Beam, Mk 4 Mod 2

BEAM, HOISTING,
MK 5 MOD 2
DL 5167159
NSN 8T 1450-01-200-8188

SWL	TEST LOAD	TEST DURATION
1,600 POUNDS	1,920 POUNDS	2 MINUTES

NOTE

Refer to chapter 3 for test fixture illustration and description.

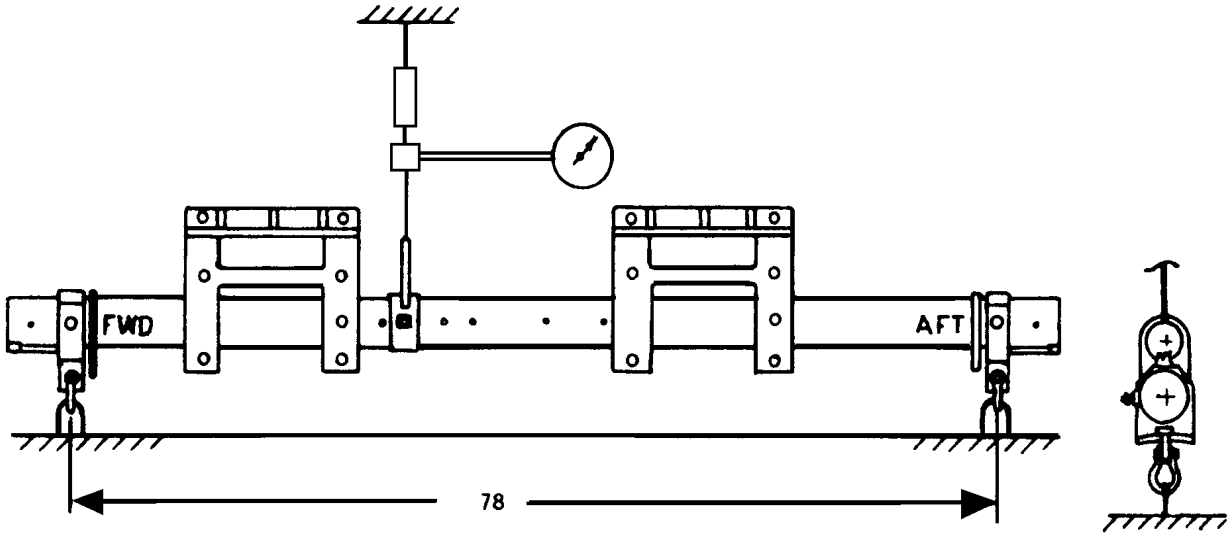

FIGURE 4-11. Test Arrangement, Hoisting Beam, Mk 5 Mod 2

BEAM, HOISTING, GUIDED MISSILE,
MK 9 MOD 0
DL 2066630
NSN 7H 1450-00-065-7724

SWL	TEST LOAD	TEST DURATION
3,700 POUNDS	7,400 POUNDS	2 MINUTES

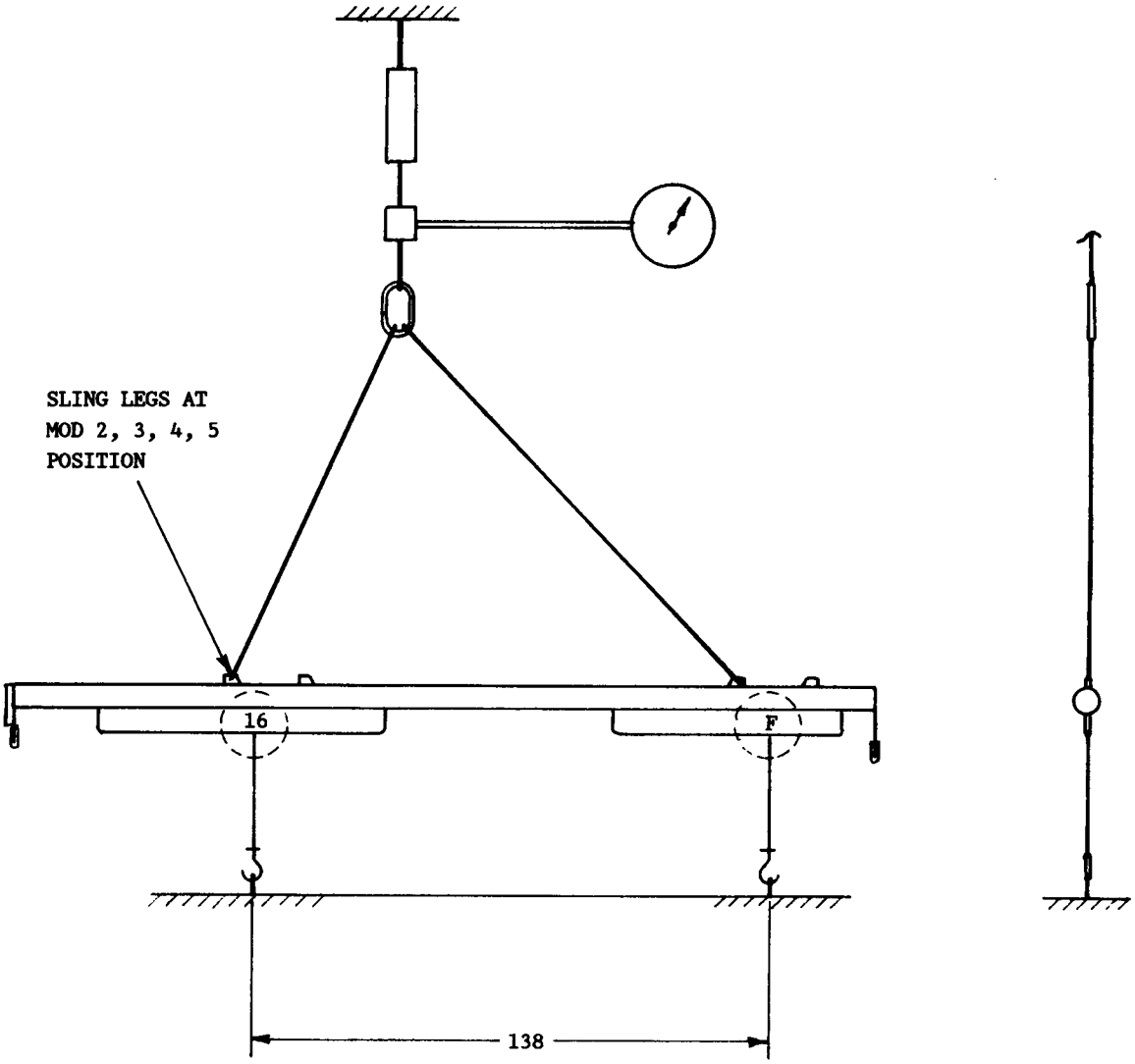

FIGURE 4-12. Test Arrangement, Guided Missile Hoisting, Mk 9 Mod 0

BEAM, HOISTING, BOOSTER,
MK 10 MOD 0
DL 2066638
NSN 1H 1450-00-065-7725

SWL	TEST LOAD	TEST DURATION
4,500 POUNDS	9,000 POUNDS	2 MINUTES

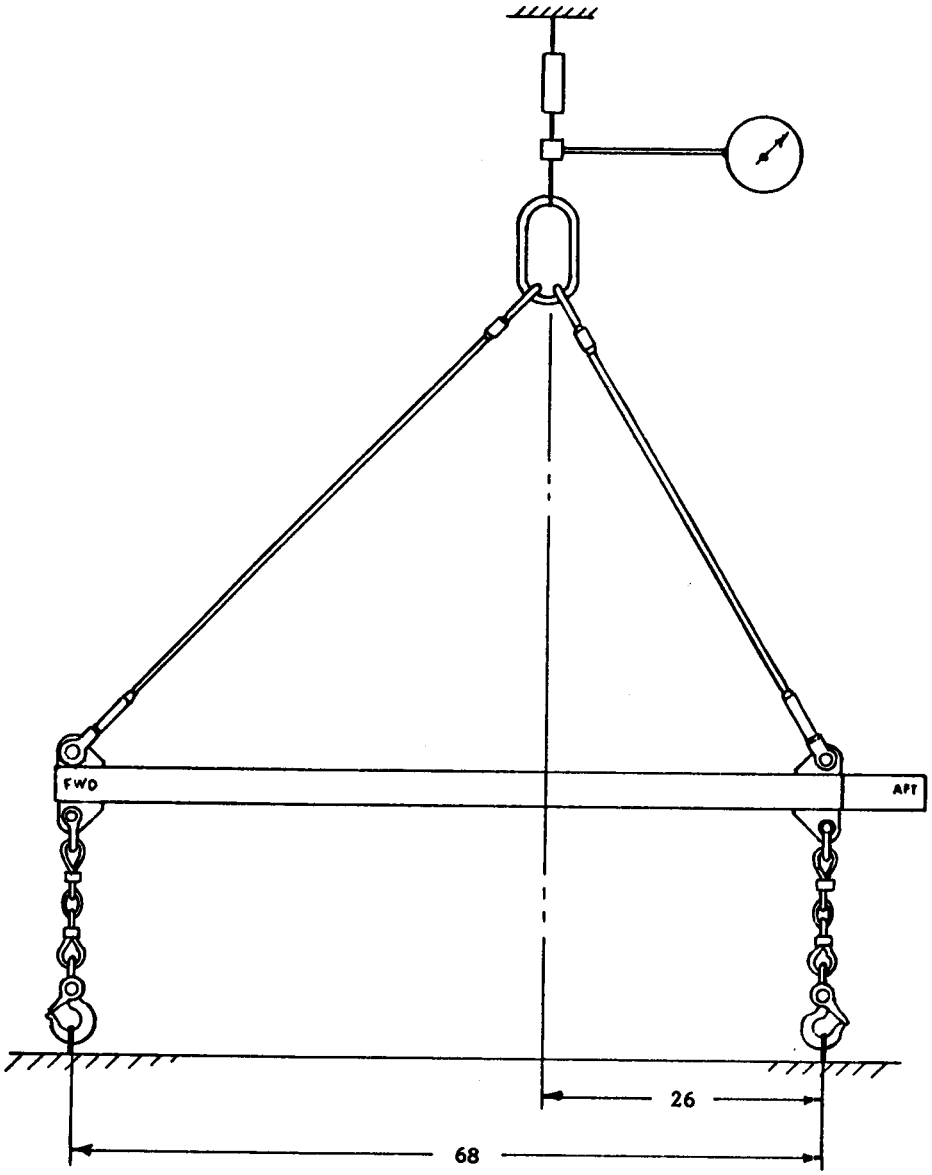

FIGURE 4-13. Test Arrangement, Booster Hoisting Beam, Mk 10 Mod 0

BEAM, HOISTING, GUIDED MISSILE,
MK 15 MOD 2
DL 6213402
NSN 8T 1450-01-382-1039

SWL	TEST LOAD	TEST DURATION
2,400 POUNDS	4,800 POUNDS	2 MINUTES

NOTE

Prior to weight testing, remove both safety slings from the quick-release pins of the cross arm assemblies. Re-install quick-release pins before testing. Upon test completion, install safety slings.

Prior to weight testing, the cross arm assemblies must be in the "TARTAR" position and the lifting plate in the "BT without warhead" position, as shown.

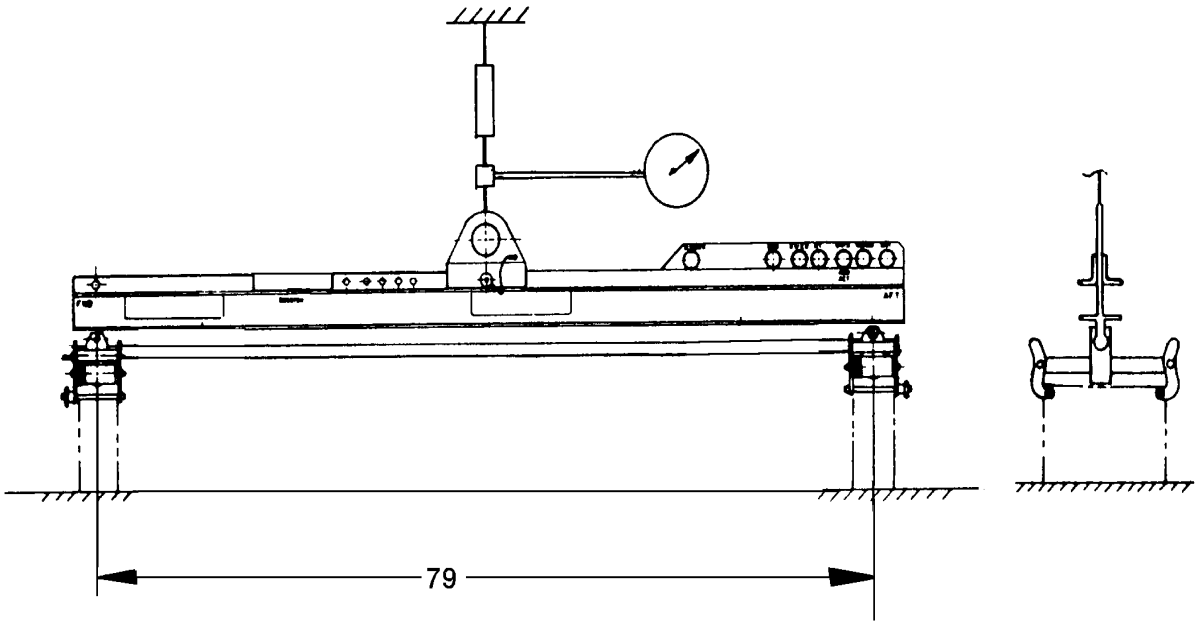

FIGURE 4-14. Test Arrangement, Guided Missile Hoisting Beam, Mk 15 Mod 2

BEAM, HANDLING,
MK 18 MOD 0
DL 2642681
NSN 1H 3940-00-169-6929

SWL	TEST LOAD	TEST DURATION
4,000 POUNDS	8,000 POUNDS	2 MINUTES

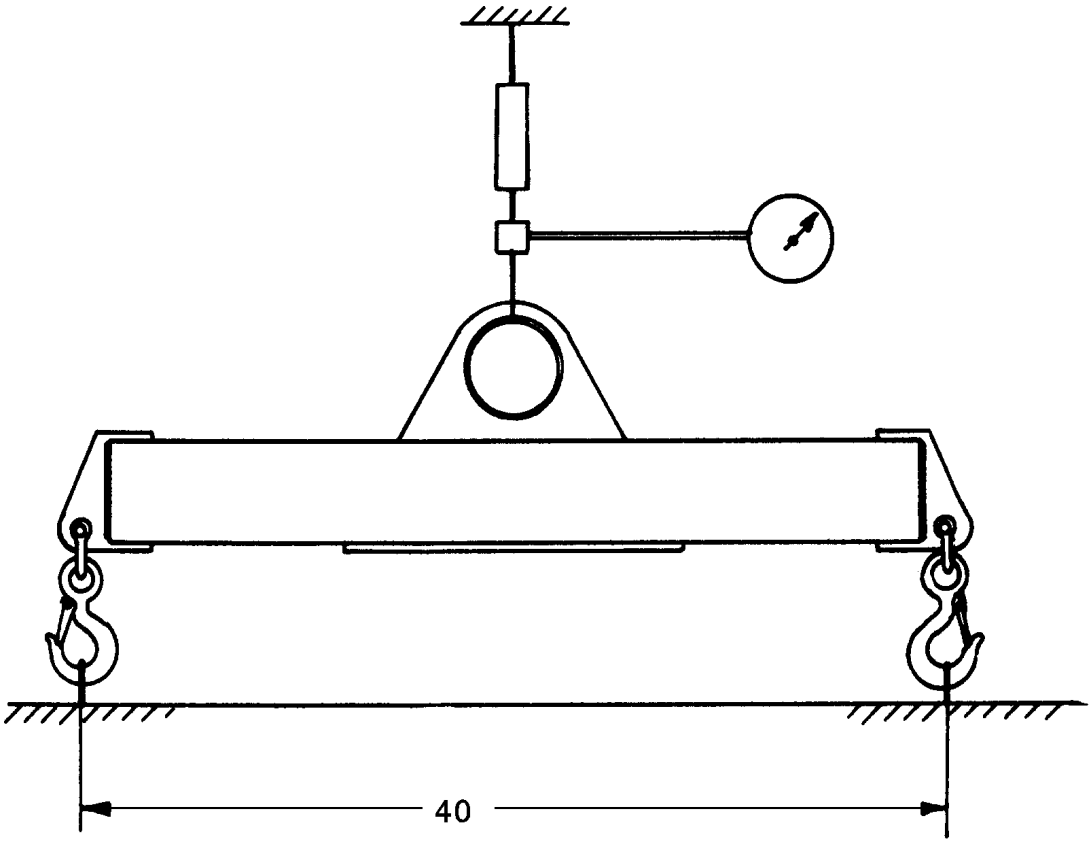

FIGURE 4-15. Test Arrangement, Handling Beam, Mk 18 Mod 0

BEAM, HANDLING,
MK 18 MOD 1
DL 2643881
NSN 9N 1450-00-557-9565

SWL	TEST LOAD	TEST DURATION
4,000 POUNDS	8,000 POUNDS	2 MINUTES

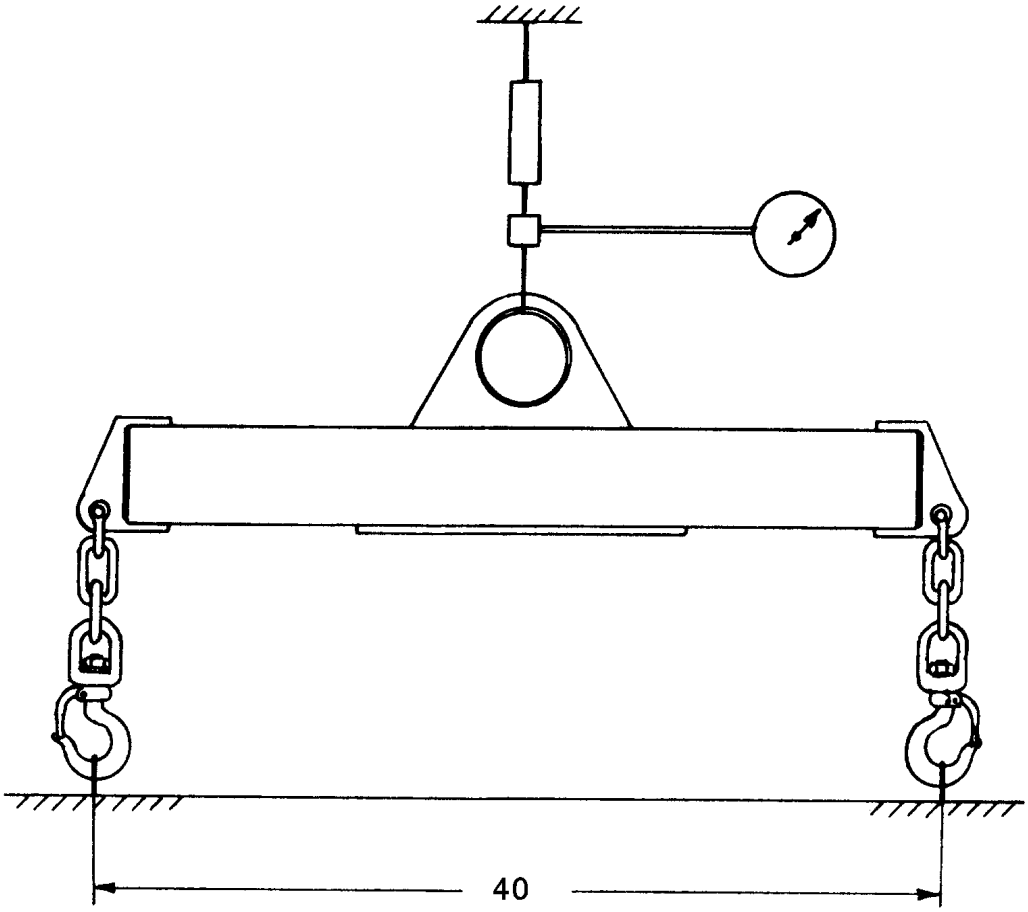

FIGURE 4-16. Test Arrangement, Handling Beam, Mk 18 Mod 1

BEAM, HANDLING,
MK 19 MOD 1
DL 2643876
NSN 9N 1420-00-557-9567

TEST NO.	SWL	TEST LOAD	TEST DURATION
1	5,000 POUNDS	10,000 POUNDS	2 MINUTES
2	4,000 POUNDS	8,000 POUNDS	2 MINUTES

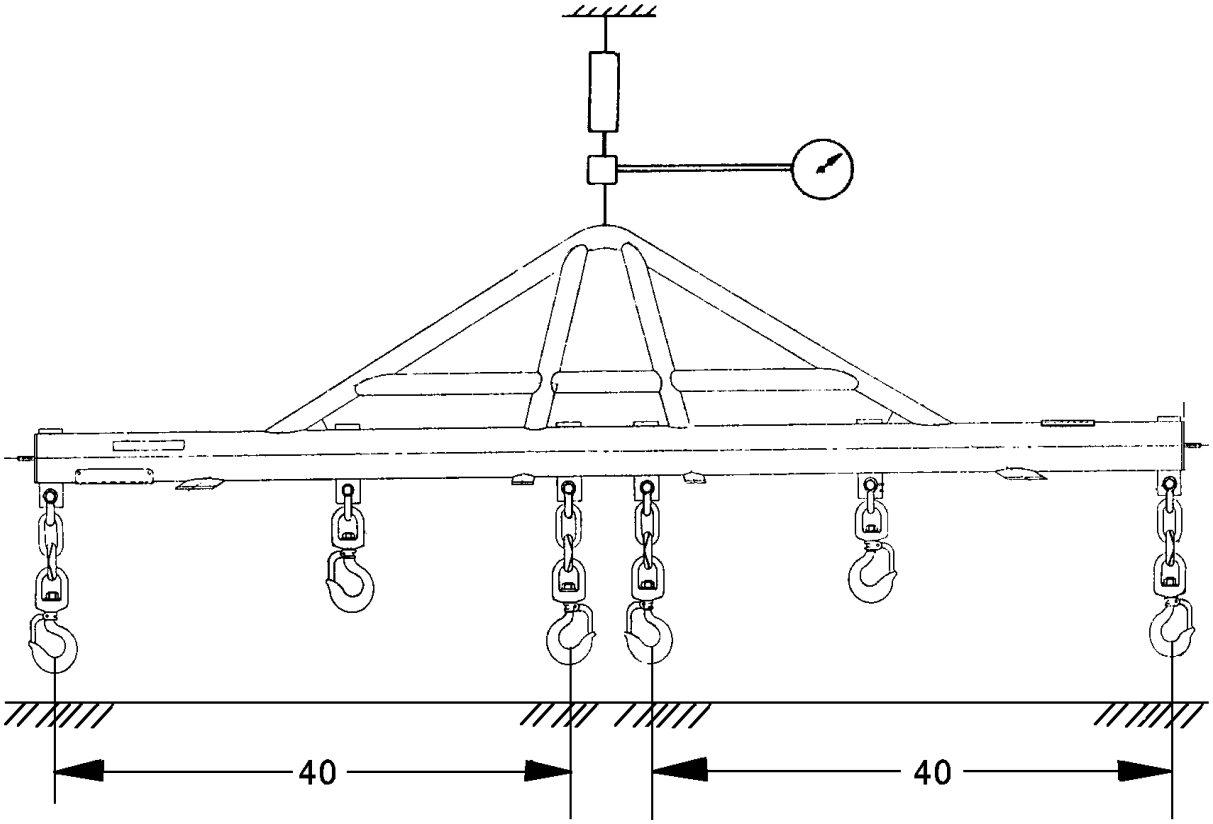

Test No. 1

FIGURE 4-17. Test Arrangement, Handling Beam, Mk 19 Mod 1 (Sheet 1 of 2)

BEAM, HANDLING,
MK 19 MOD 1
DL 2643876
NSN 9N 1420-00-557-9567

TEST NO.	SWL	TEST LOAD	TEST DURATION
1	5,000 POUNDS	10,000 POUNDS	2 MINUTES
2	4,000 POUNDS	8,000 POUNDS	2 MINUTES

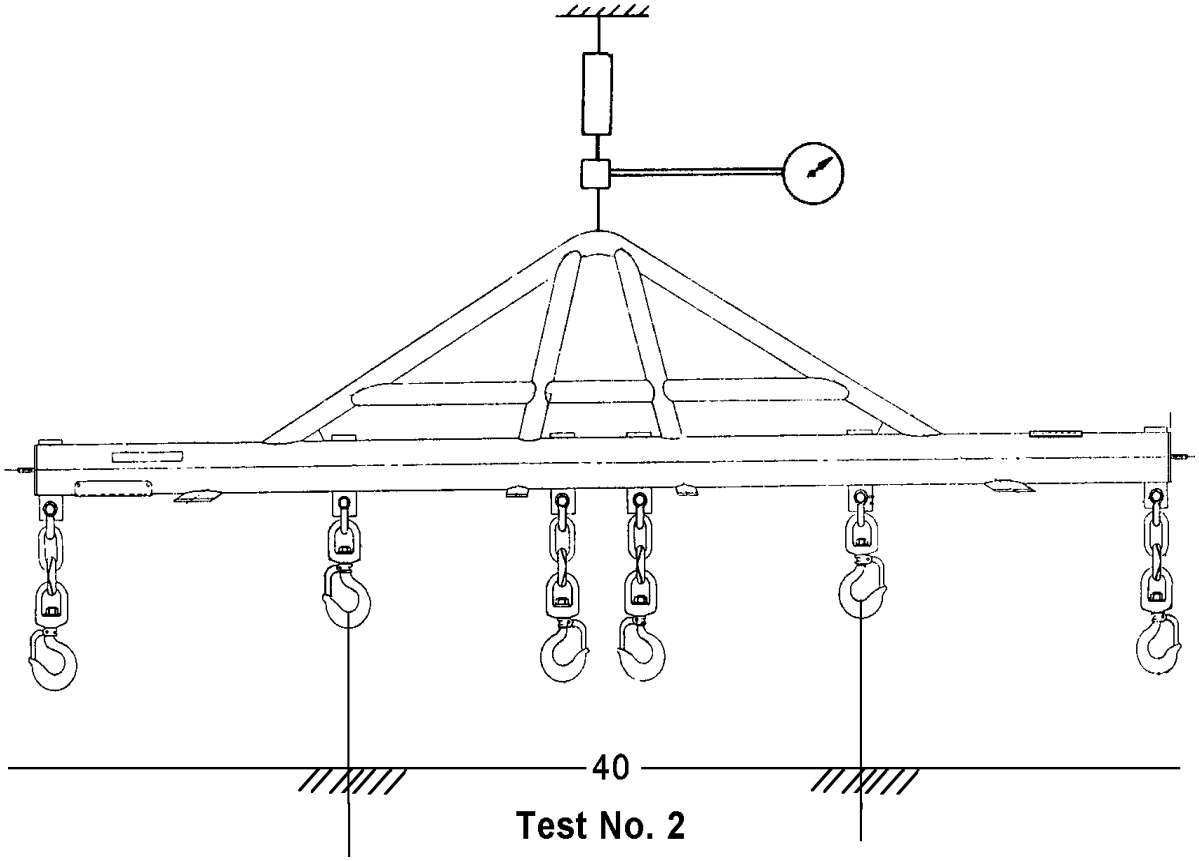

FIGURE 4-17. Test Arrangement, Handling Beam, Mk 19 Mod 1 (Sheet 2 of 2)

BEAM, HOISTING
MK 21 MOD 0
DL 2642626
NSN 2J 3940-01-454-1744

SWL	TEST LOAD	TEST DURATION
5,000 POUNDS	10,000 POUNDS	2 MINUTES

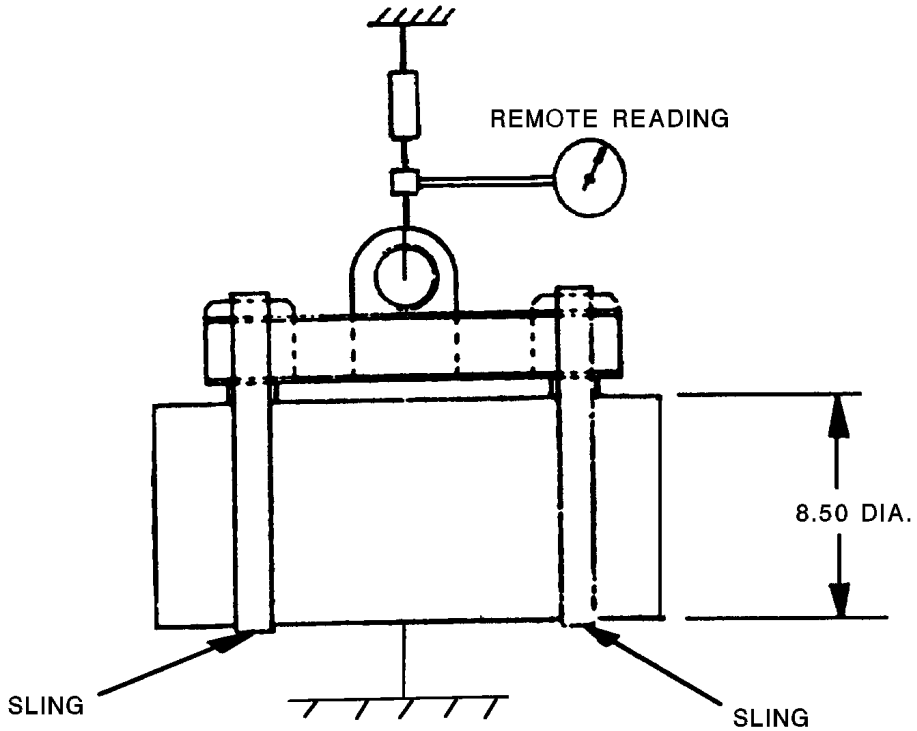

FIGURE 4-18. Test Arrangement, Hoisting Beam, Mk 21 Mod 0

BEAM, HANDLING,
MK 22 MOD 0
DL 1330641
NSN 7H 3940-00-157-3092

SWL	TEST LOAD	TEST DURATION
1,800 POUNDS	3,600 POUNDS	2 MINUTES

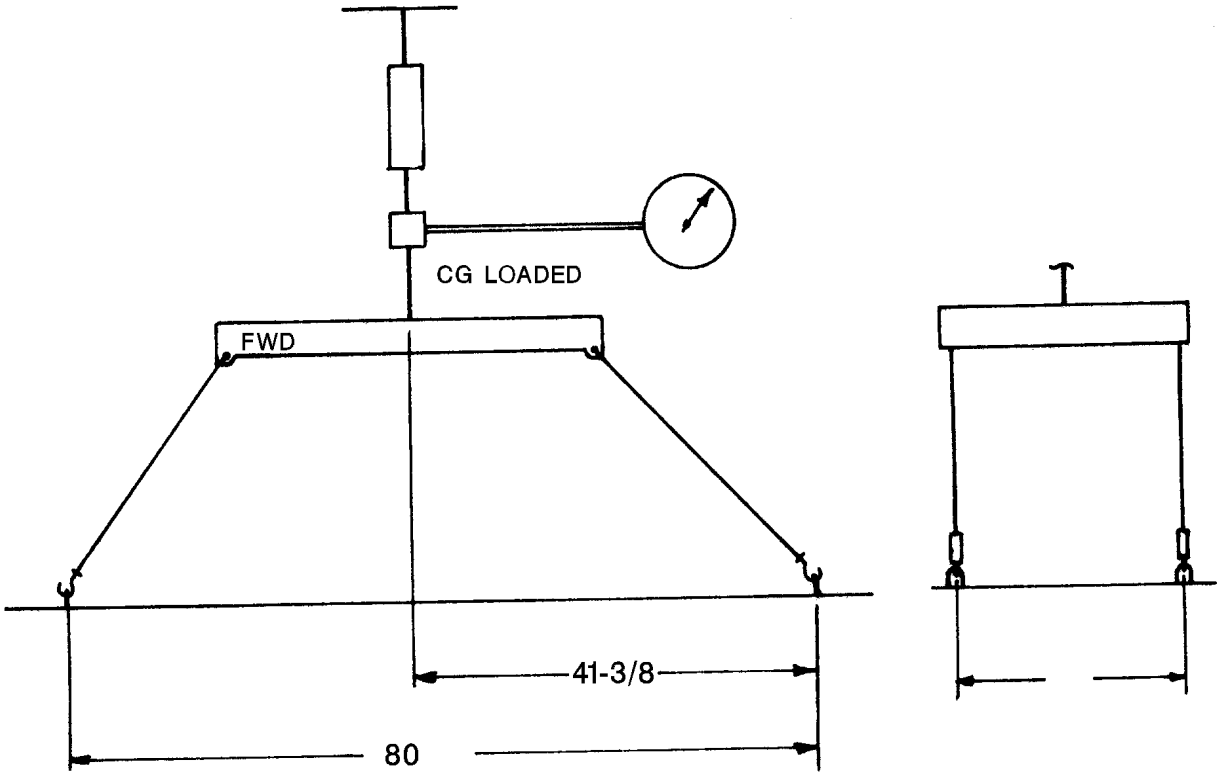

FIGURE 4-19. Test Arrangement, Handling Beam, Mk 22 Mod 0

BEAM, HOISTING,
MK 24 MOD 0
DL 2643825
NSN 1H 1450-00-003-1293

SWL	TEST LOAD	TEST DURATION
550 POUNDS	1,100 POUNDS	2 MINUTES

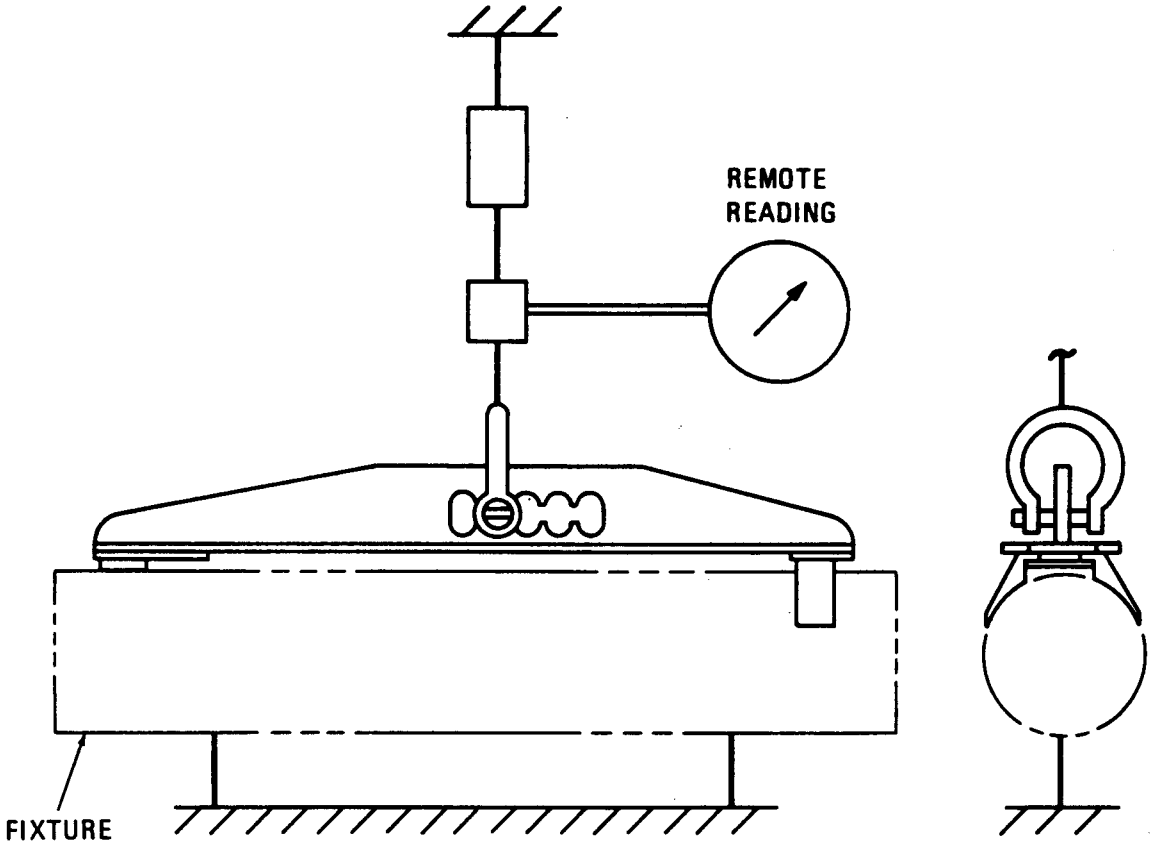

FIGURE 4-20. Test Arrangement, Hoisting Beam, Mk 24 Mod 0

BEAM, LOW OVERHEAD LIFT, HARPOON CANISTERS,
MK 30 MOD 0
DL 5166042
NSN 1H 1450-01-111-8362

SWL	TEST LOAD	TEST DURATION
2,150 POUNDS	2,580 POUNDS	2 MINUTES

NOTE

Refer to chapter 3 for test fixture illustration and description.

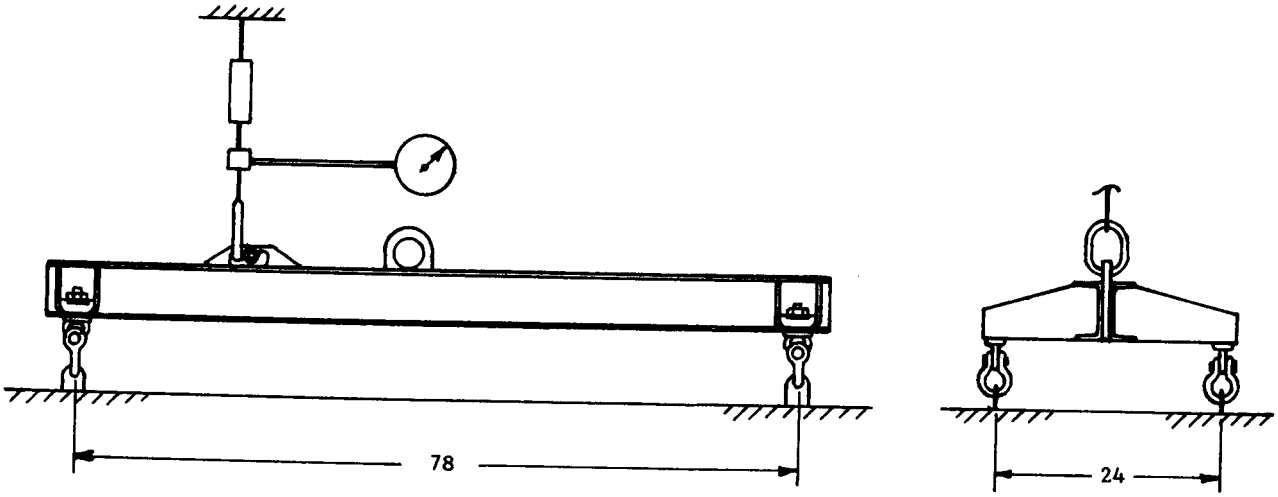

FIGURE 4-21. Test Arrangement, HARPOON Canisters Low Overhead Lift Beam, Mk 30 Mod 0

BEAM, LOW OVERHEAD LIFT, HARPOON CANISTERS,
MK 30 MOD 1
DL 5167255
NSN 8E 1450-01-217-8823

SWL	TEST LOAD	TEST DURATION
5,000 POUNDS	6,000 POUNDS	2 MINUTES

NOTE

Refer to chapter 3 for test fixture illustration and description.

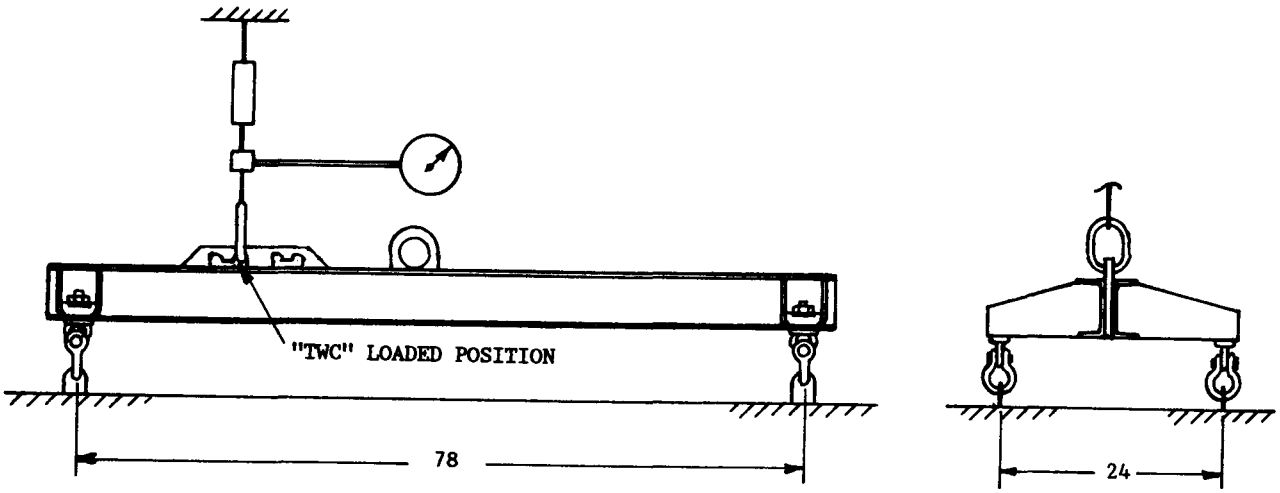

FIGURE 4-22. Test Arrangement, HARPOON Canisters Low Overhead Lift Beam, Mk 30 Mod 1

BEAM, HOIST ROTATION
MK 31 MOD 1
DL 5166660
NSN 7H 1450-01-047-4412

SWL	TEST LOAD	TEST DURATION
2,150 POUNDS	4,300 POUNDS	2 MINUTES

NOTE

Refer to chapter 3 for test fixture illustration and description.

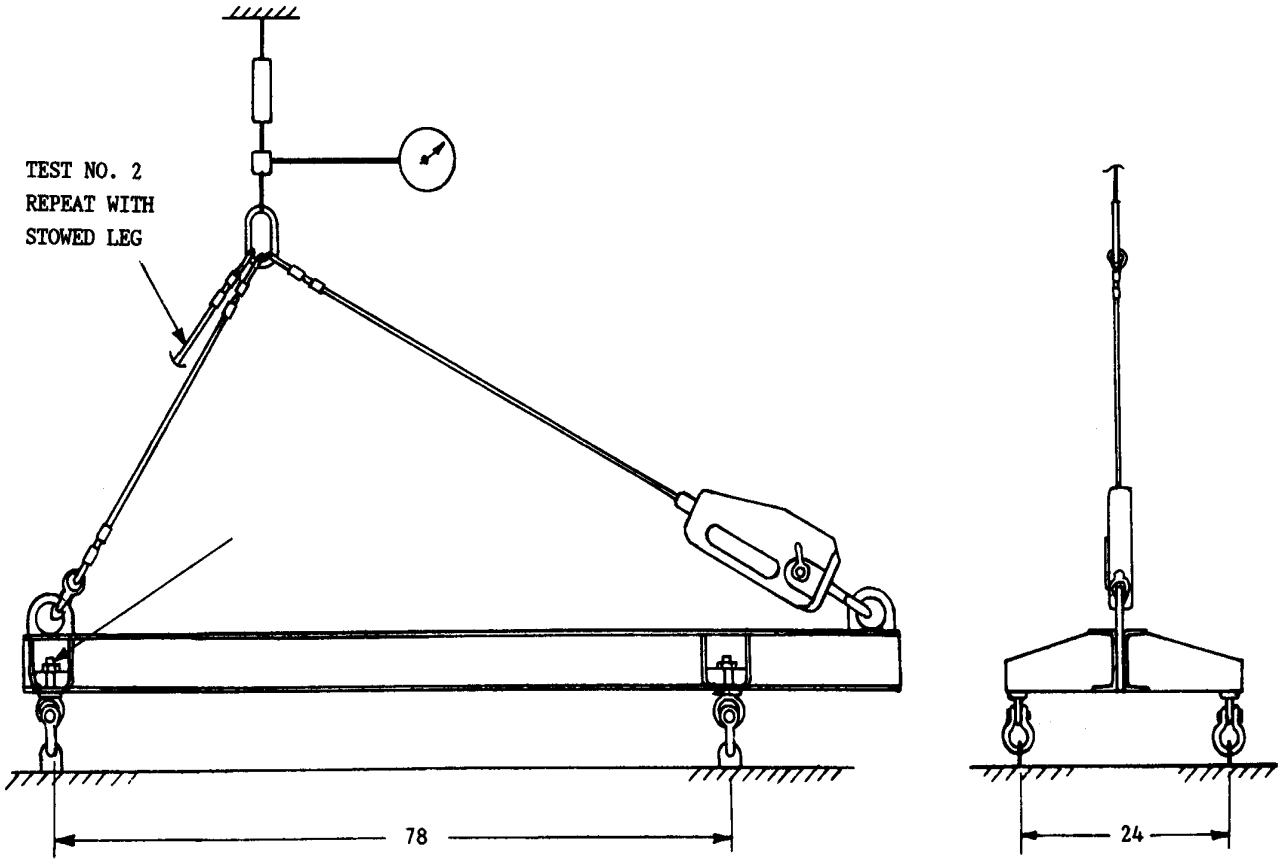

FIGURE 4-23. Test Arrangement, Hoist Rotation Beam, Mk 31 Mod 1

BEAM, HOIST ROTATION,
MK 31 MOD 2
DL 5167237
NSN 7H 3940-01-253-4735

SWL	TEST LOAD	TEST DURATION
4,500 POUNDS	9,000 POUNDS	2 MINUTES

NOTE

Refer to chapter 3 for test fixture illustration and description.

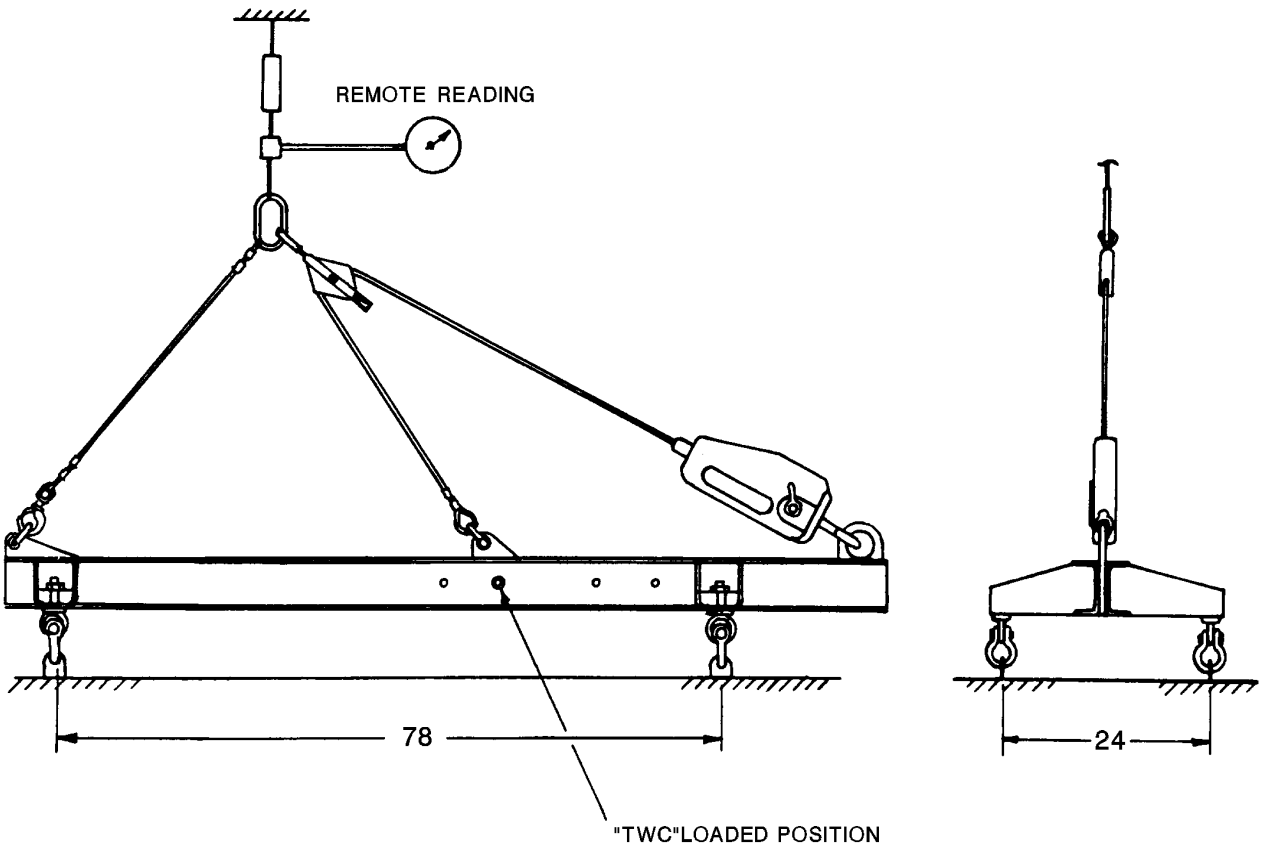

FIGURE 4-24. Test Arrangement, Hoist Rotation Beam, Mk 31 Mod 2

BEAM, HOIST ROTATION,
MK 31 MOD 3
DL 6213442
NSN 9C 1450-01-438-0914

SWL	TEST LOAD	TEST DURATION
4,500 POUNDS	9,000 POUNDS	2 MINUTES

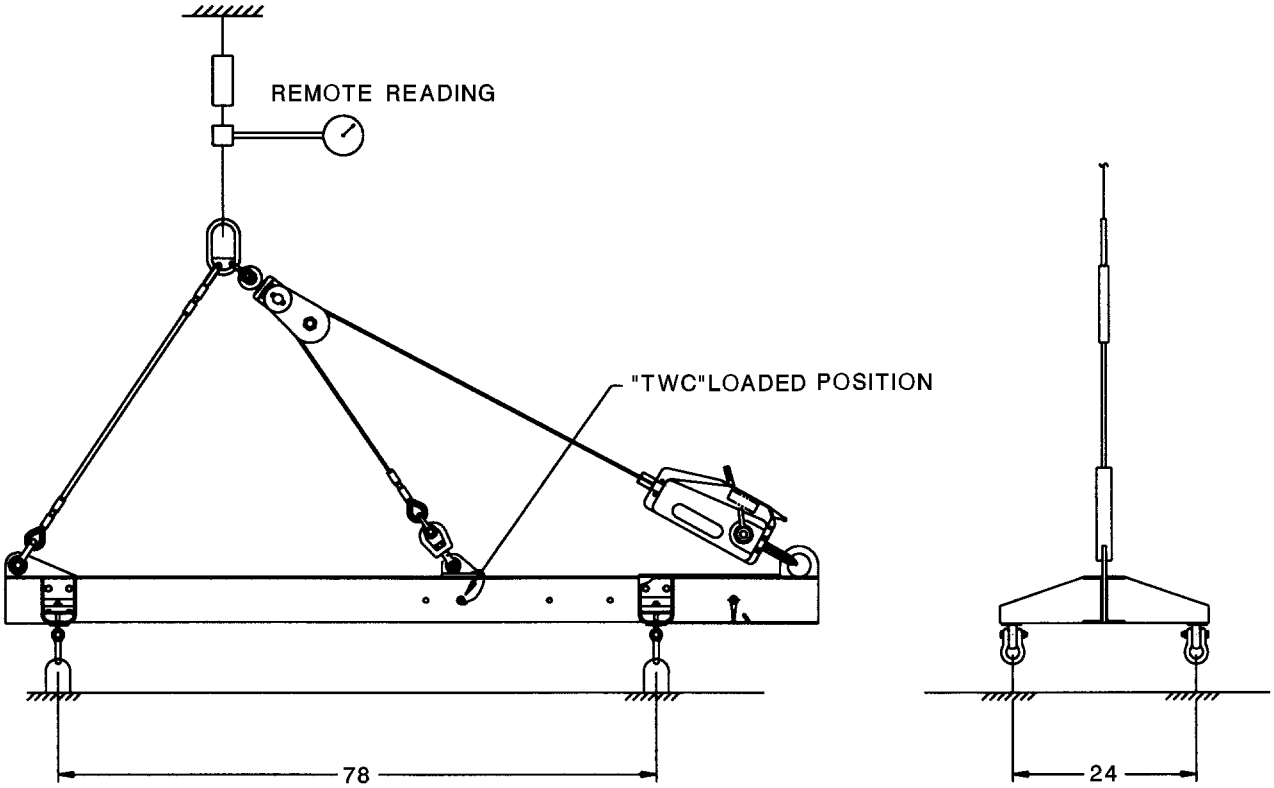

FIGURE 4-25. Test Arrangement, Hoist Rotation Beam, Mk 31 Mod 3

BEAM, LIFT,
MK 32 MOD 0
DL 5166233
NSN 1H 1450-01-111-8363

SWL	TEST LOAD	TEST DURATION
1,300 POUNDS	1,560 POUNDS	2 MINUTES

NOTE

Refer to chapter 3 for test fixture illustration and description.

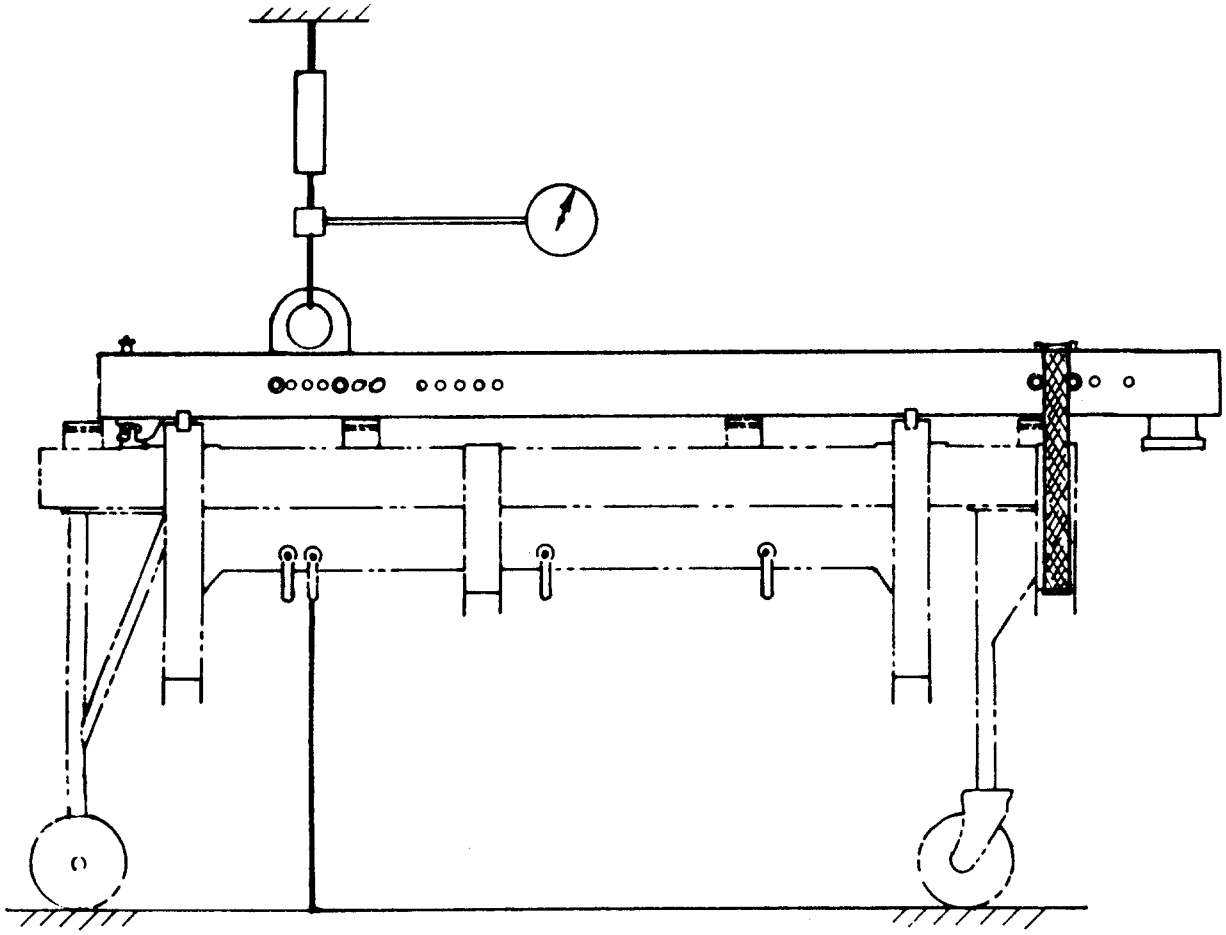

FIGURE 4-26. Test Arrangement, Lift Beam, Mk 32 Mod 0

BEAM, LIFT,
MK 33 MOD 0
DL 5166505
NSN 1H 1450-01-111-8364

SWL	TEST LOAD	TEST DURATION
500 POUNDS	600 POUNDS	2 MINUTES

NOTE

Refer to chapter 3 for test fixture illustration and description.

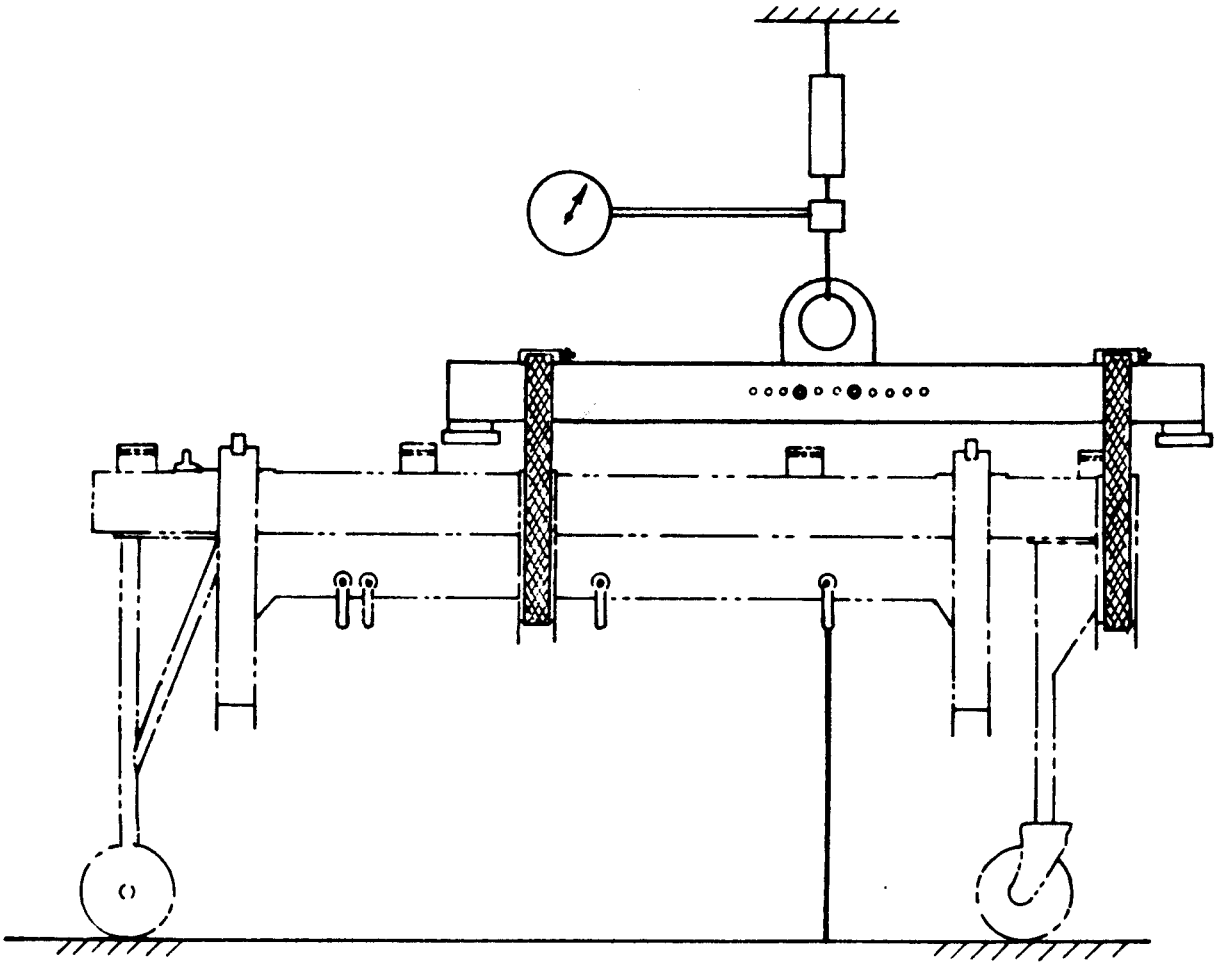

FIGURE 4-27. Test Arrangement, Lift Beam, Mk 33 Mod 0

BEAM, LIFT,
MK 34 MOD 0
DL 5166502
NSN 1H 1450-01-111-8365

SWL	TEST LOAD	TEST DURATION
1,600 P0UNDS	1,920 POUNDS	2 MINUTES

NOTE

Refer to chapter 3 for test fixture illustration and description.

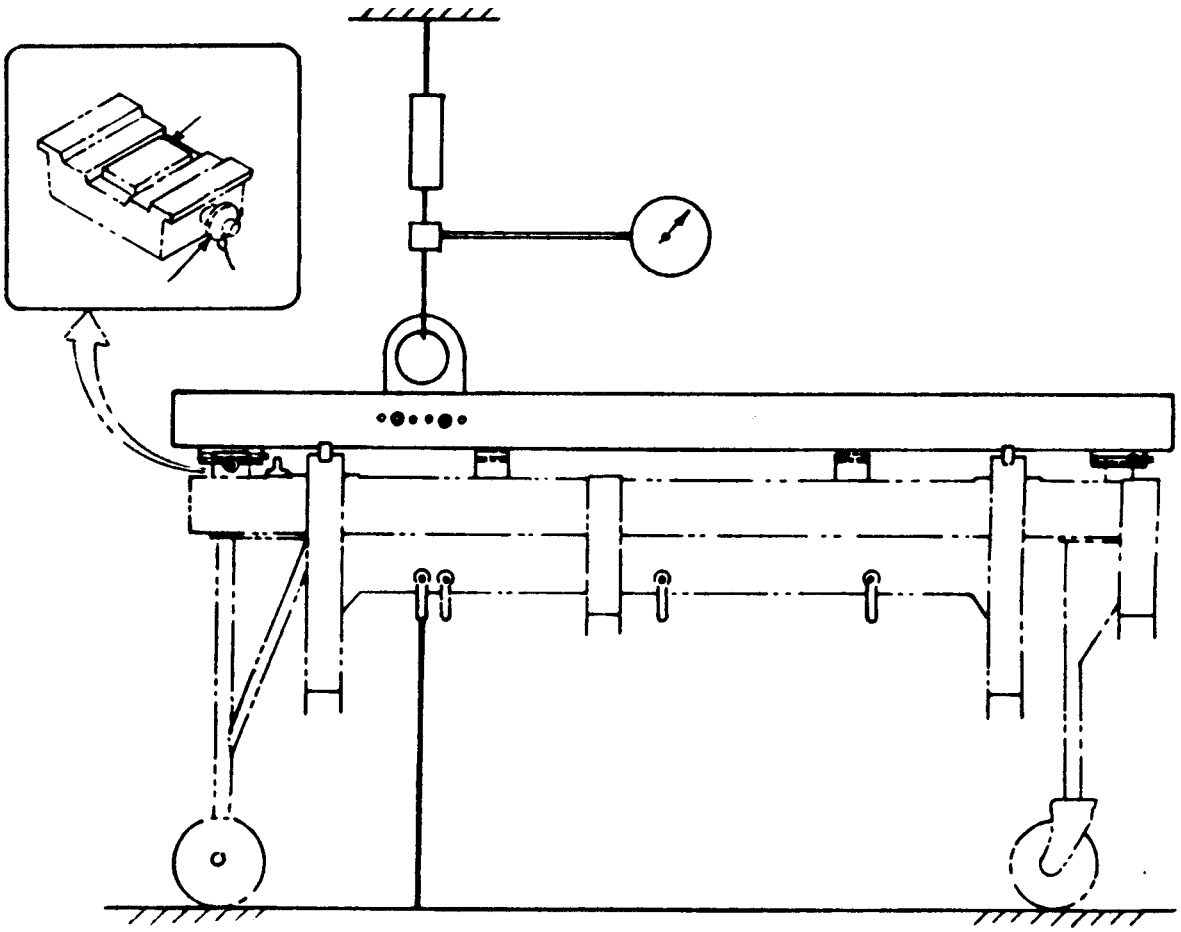

FIGURE 4-28. Test Arrangement, Lift Beam, Mk 34 Mod 0

BEAM, LIFT,
MK 35 MOD 0
DL 5166503
NSN 1H 1450-01-117-9729

SWL	TEST LOAD	TEST DURATION
1,600 POUNDS	1,920 POUNDS	2 MINUTES

NOTE

Refer to chapter 3 for test fixture illustration and description.

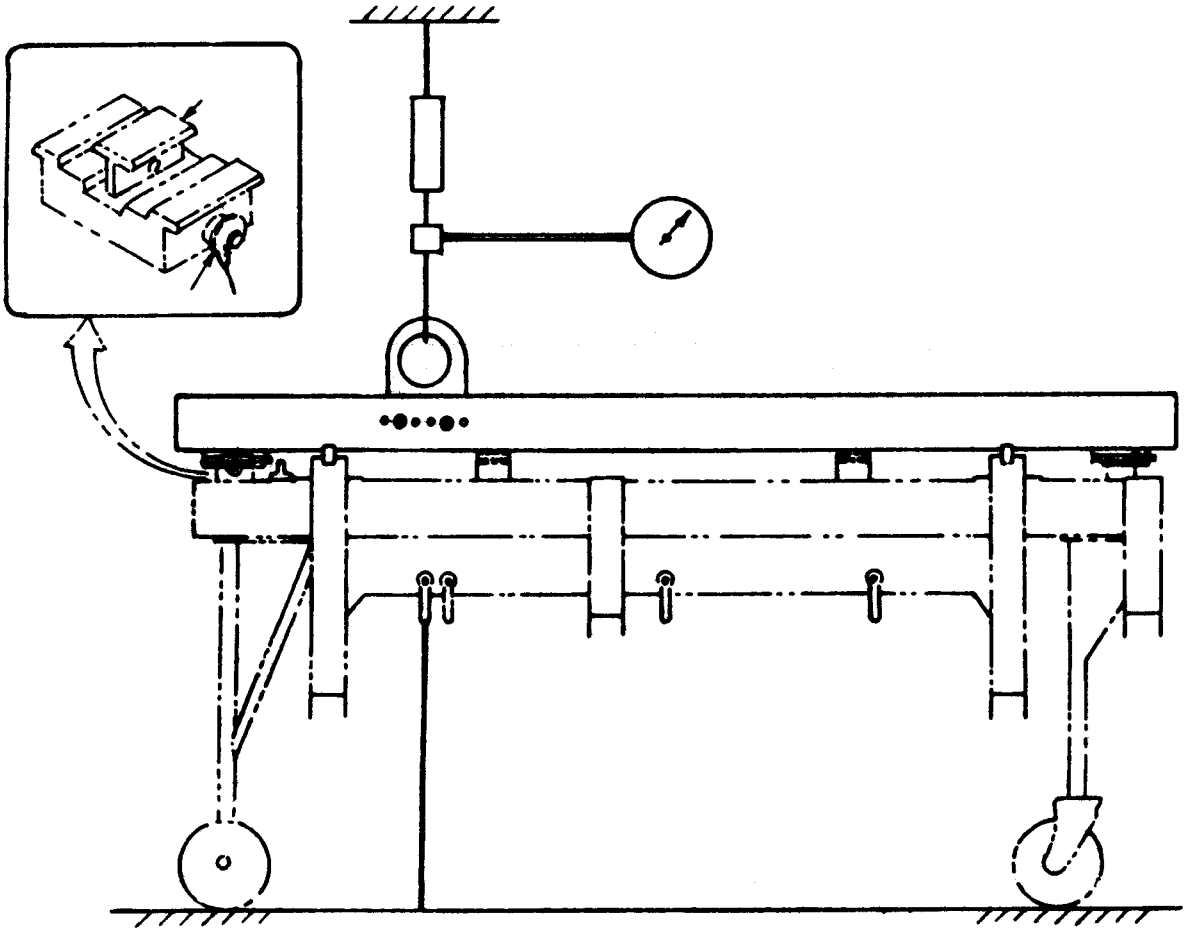

FIGURE 4-29. Test Arrangement, Lift Beam, Mk 35 Mod 0

BEAM, LIFT,
MK 36 MOD 0
DL 5166473
NSN 1H 1450-01-119-8851

SWL	TEST LOAD	TEST DURATION
1,500 POUNDS	1,800 POUNDS	2 MINUTES

NOTE

Refer to chapter 3 for test fixture illustration and description.

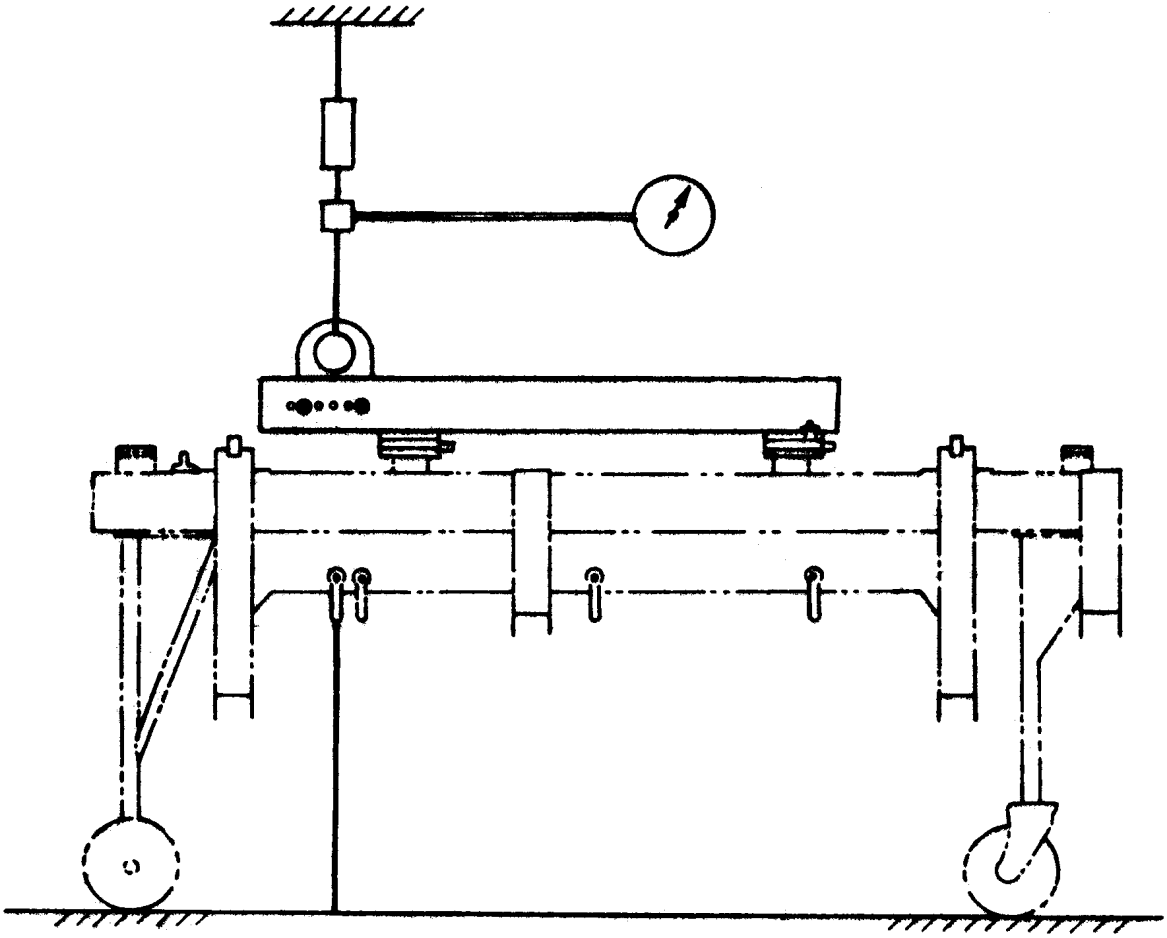

FIGURE 4-30. Test Arrangement, Lift Beam, Mk 36 Mod 0

BEAM, LIFT,
MK 37 MOD 0
DL 5166501
NSN 3C 1450-01-111-8366

SWL	TEST LOAD	TEST DURATION
1,200 POUNDS	1,440 POUNDS	2 MINUTES

NOTE

Refer to chapter 3 for test fixture illustration and description.

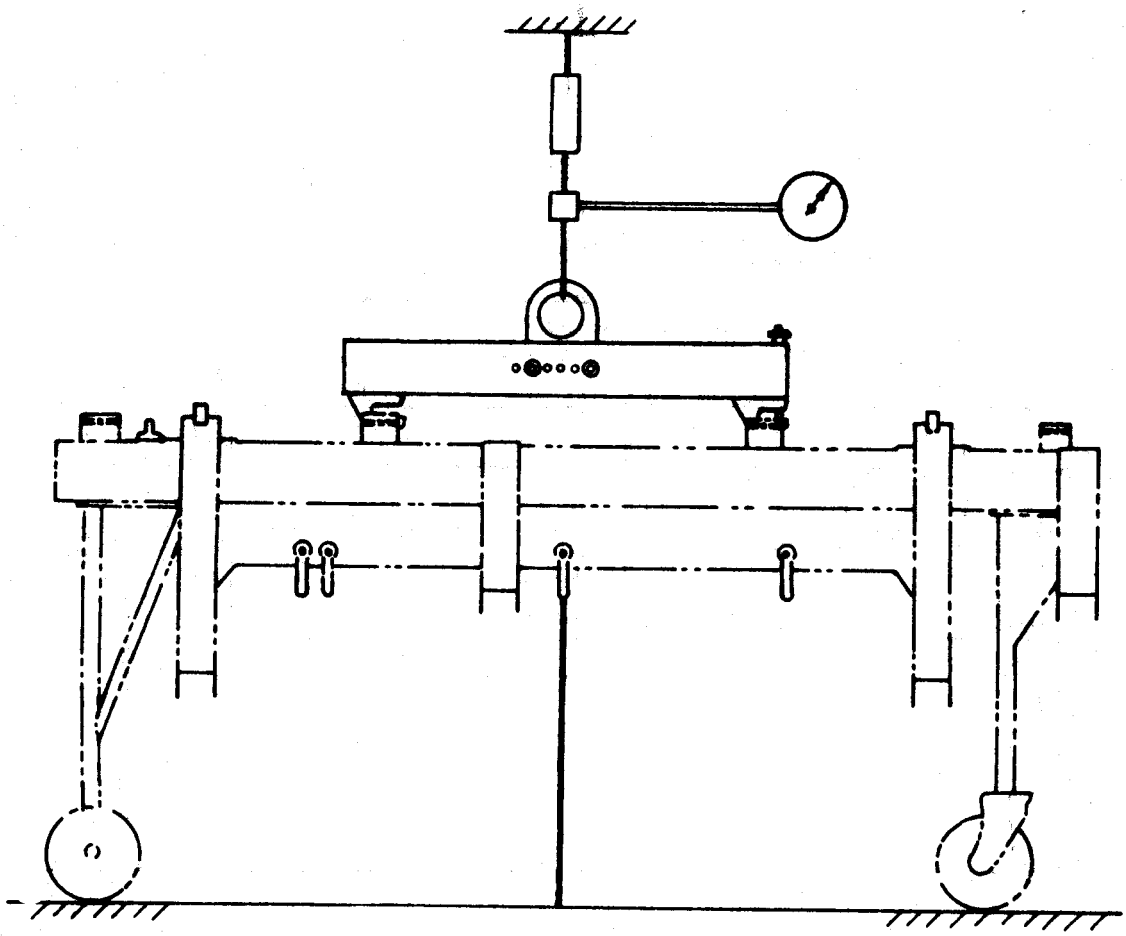

FIGURE 4-31. Test Arrangement, Lift Beam, Mk 37 Mod 0

BEAM, LIFT, HARPOON, AIR LAUNCH,
MK 37 MOD 1
DL 6212913
NSN TO BE ASSIGNED

SWL	TEST LOAD	TEST DURATION
1,450 POUNDS	1,740 POUNDS	2 MINUTES

NOTE

Refer to chapter 3 for test fixture illustration and description.

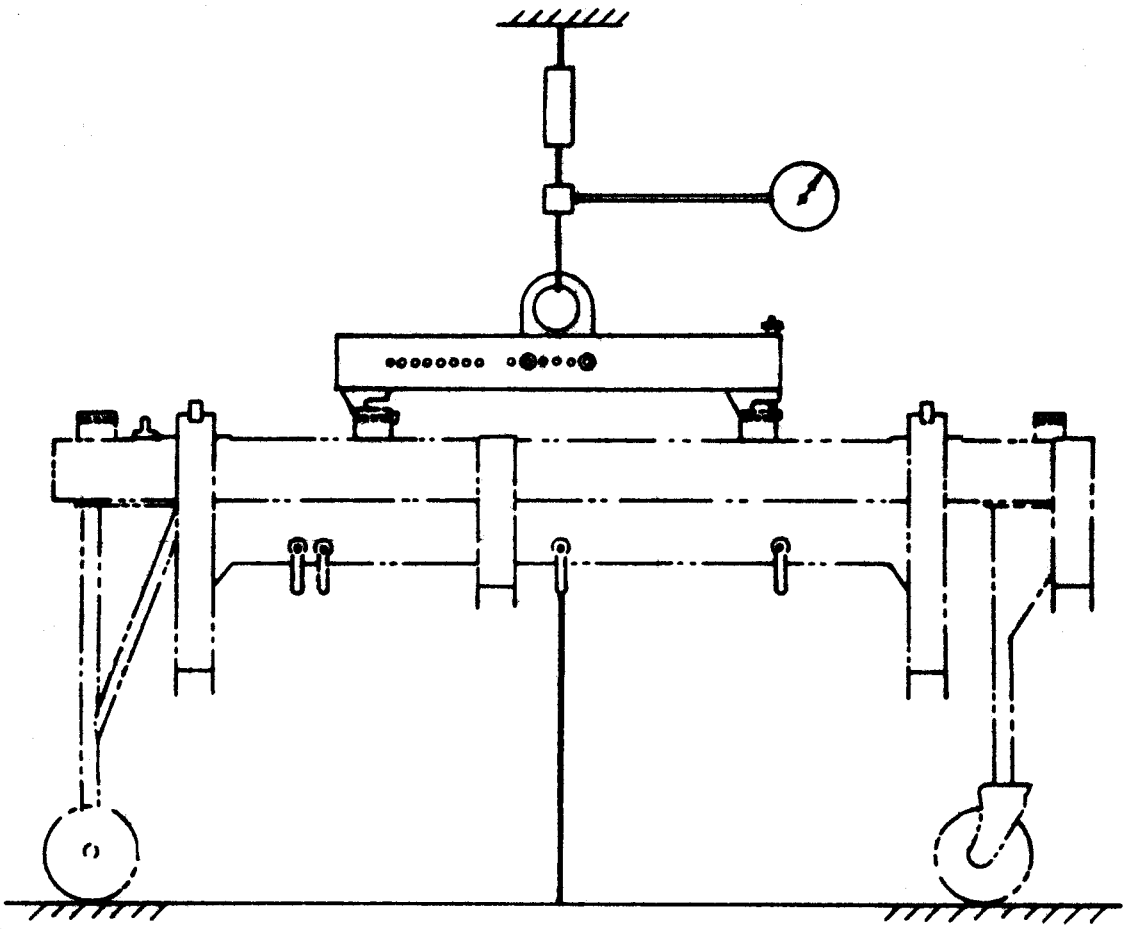

Test No. 1

FIGURE 4-32. Test Arrangement, Lift HARPOON Air Launch Beam, Mk 37 Mod 1 (Sheet 1 of 2)

BEAM, LIFT, HARPOON, AIR LAUNCH,
MK 37 MOD 1
DL 6212913
NSN TO BE ASSIGNED

SWL	TEST LOAD	TEST DURATION
1,450 POUNDS	1,740 POUNDS	2 MINUTES

NOTE

Refer to chapter 3 for test fixture illustration and description.

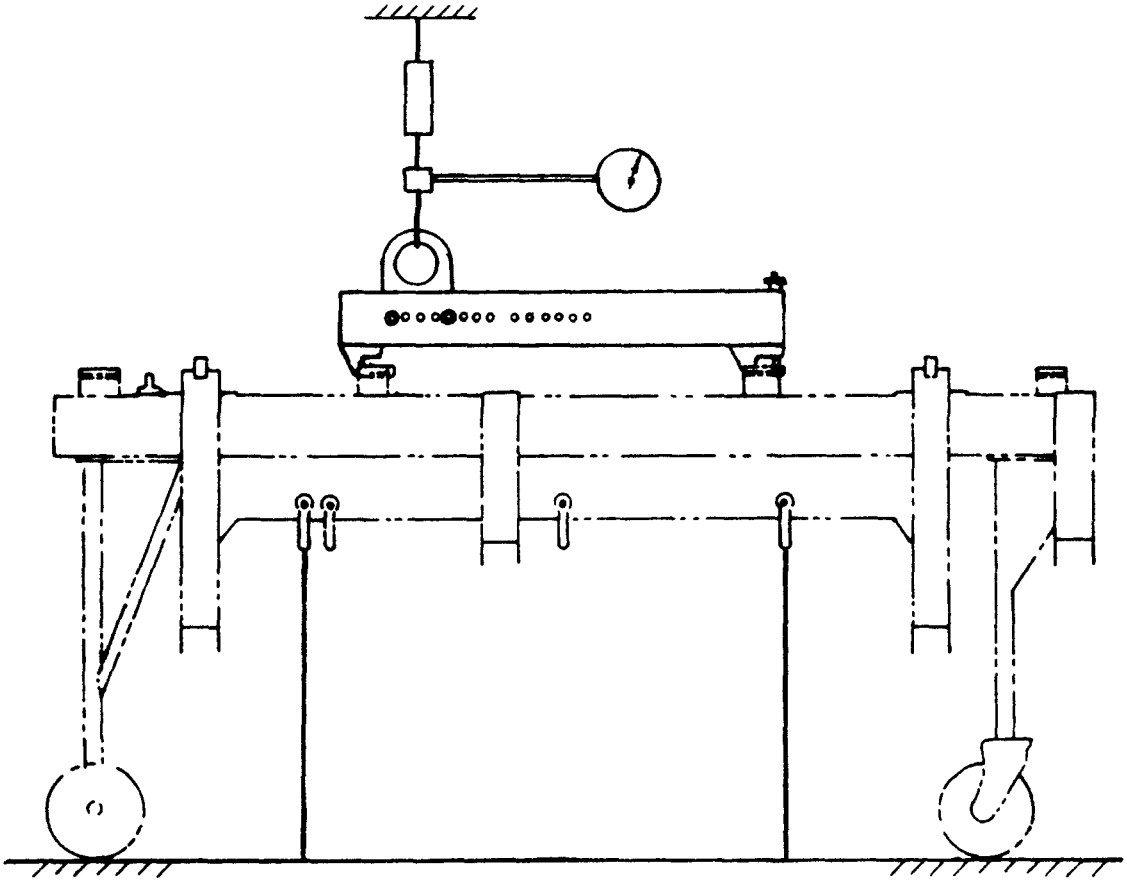

Test No. 2

FIGURE 4-32. Test Arrangement, Lift HARPOON Air Launch Beam, Mk 37 Mod 1 (Sheet 2 of 2)

BEAM, LIFT,
MK 38 MOD 0
DL 5166504
NSN 1H 1450-01-119-8852

SWL	TEST LOAD	TEST DURATION
2,500 POUNDS	3,000 POUNDS	2 MINUTES

NOTE

Refer to chapter 3 for test fixture illustration and description.

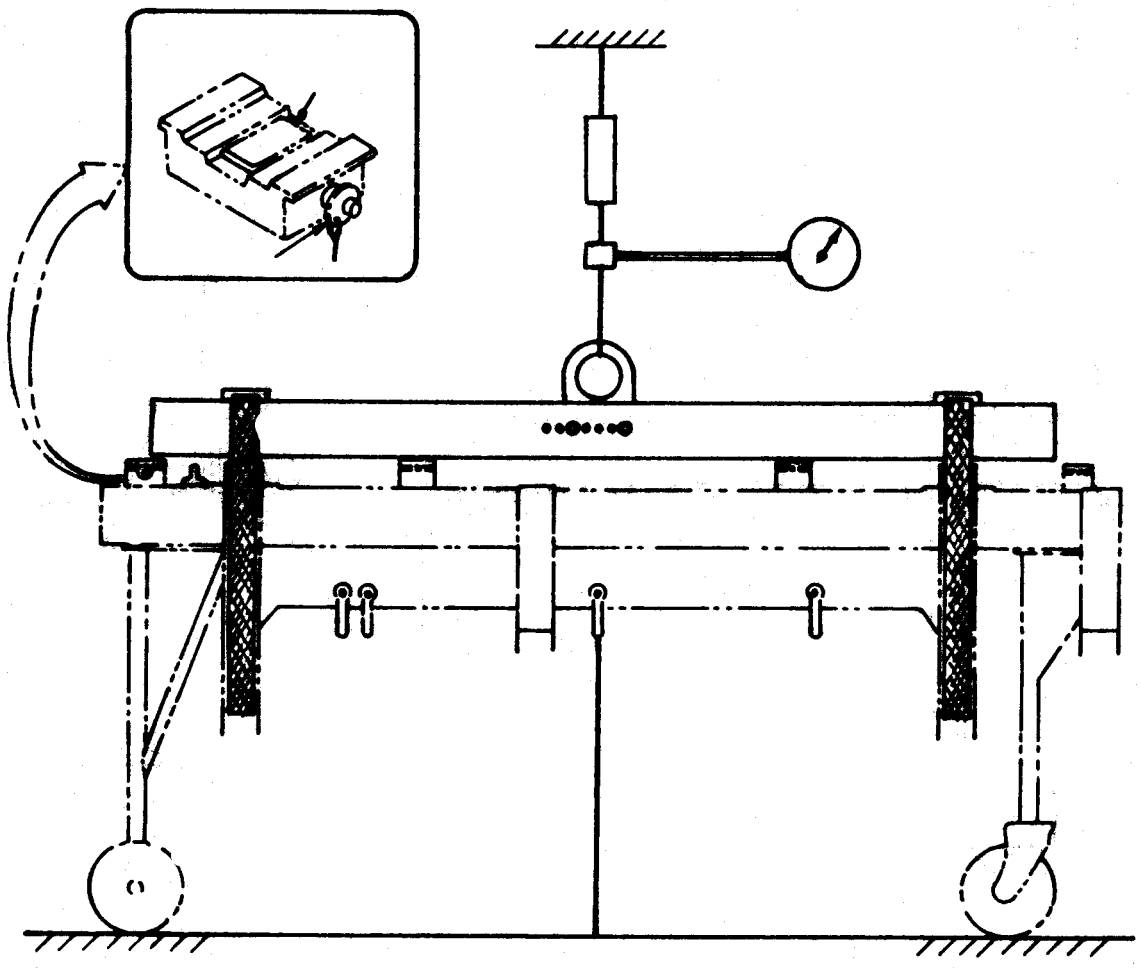

FIGURE 4-33. Test Arrangement, Lift Beam, Mk 38 Mod 0

BEAM, LIFT,
MK 40 MOD 0
DL 5166639
NSN TO BE ASSIGNED

SWL	TEST LOAD	TEST DURATION
550 POUNDS	660 POUNDS	2 MINUTES

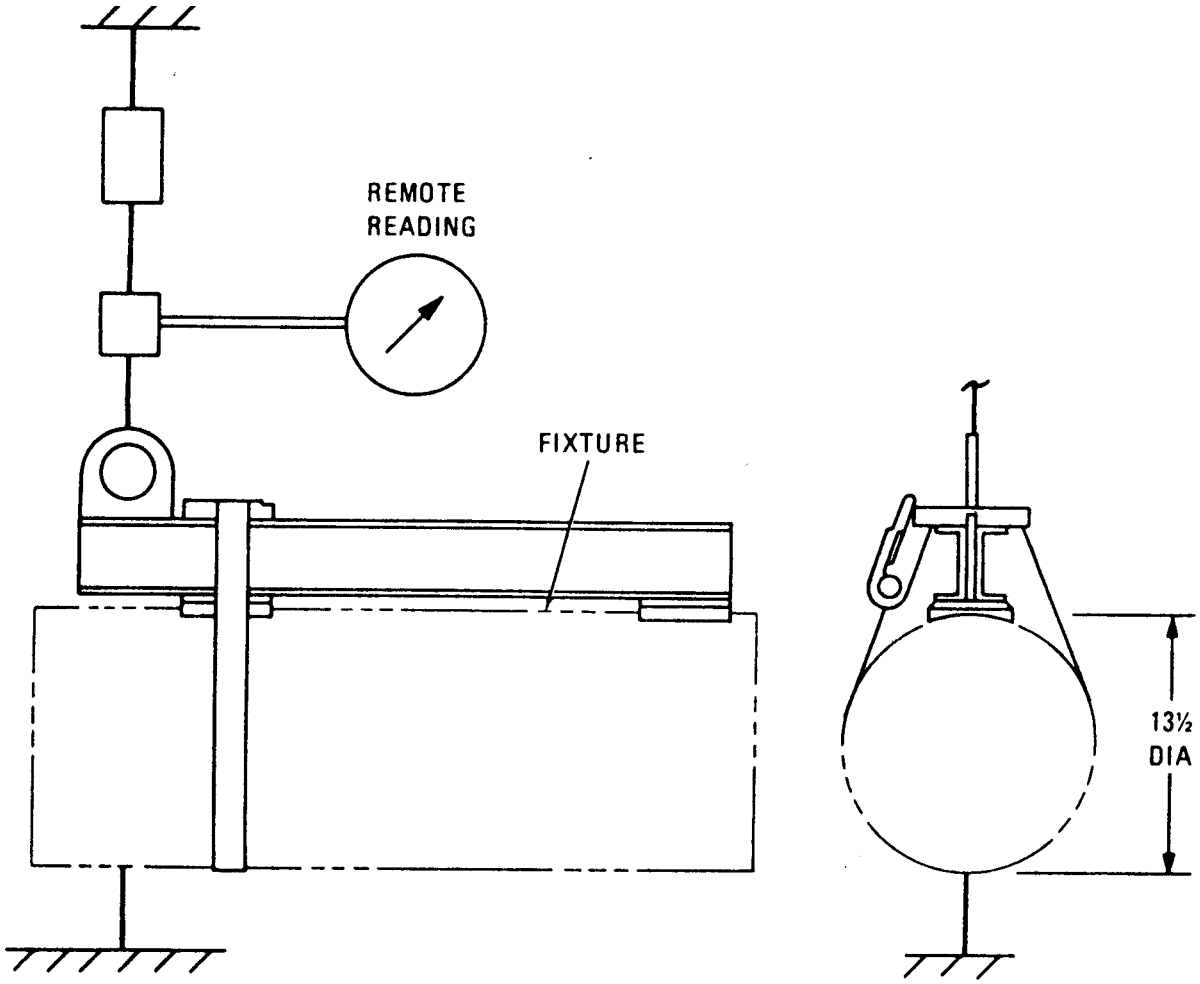

FIGURE 4-34. Test Arrangement, Lift Beam, Mk 40 Mod 0

BEAM, LIFT,
MK 41 MOD 0
DL 5166647
NSN 1H 1450-01-142-1737

SWL	TEST LOAD	TEST DURATION
300 POUNDS	360 POUNDS	2 MINUTES

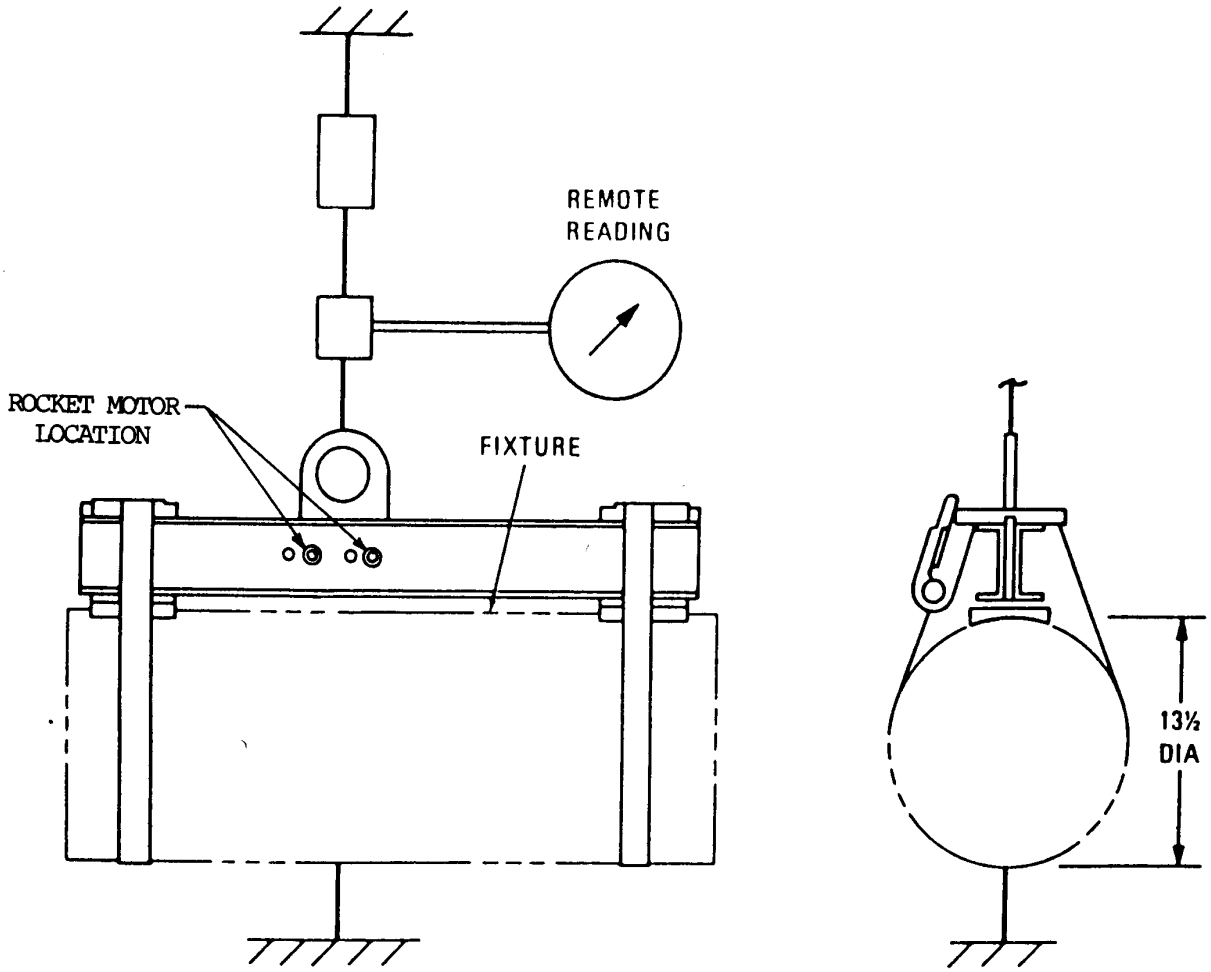

FIGURE 4-35. Test Arrangement, Lift Beam, Mk 41 Mod 0

BEAM, DOCKSIDE LOADING,
MK 43 MOD 0
DL 5167502
NSN 1H 3940-01-245-8719

SWL	TEST LOAD	TEST DURATION
4,000 POUNDS	8,000 POUNDS	2 MINUTES

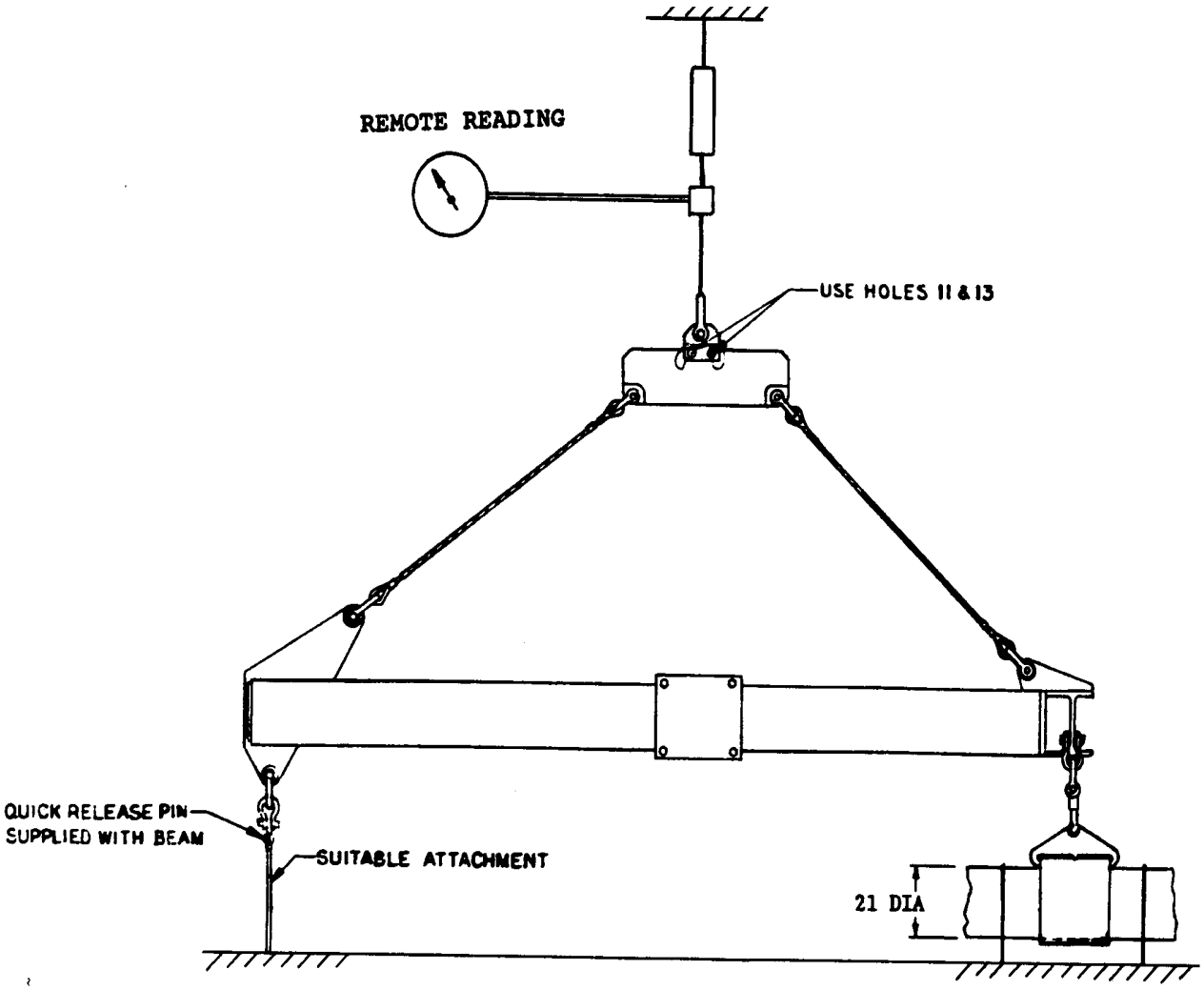

FIGURE 4-36. Test Arrangement, Dockside Loading Beam, Mk 43 Mod 0

BEAM, LIFT,
MK 44 MOD 0
DL 5167164
NSN 1H 1450-01-253-1126

SWL	TEST LOAD	TEST DURATION
4,500 POUNDS	9,000 POUNDS	2 MINUTES

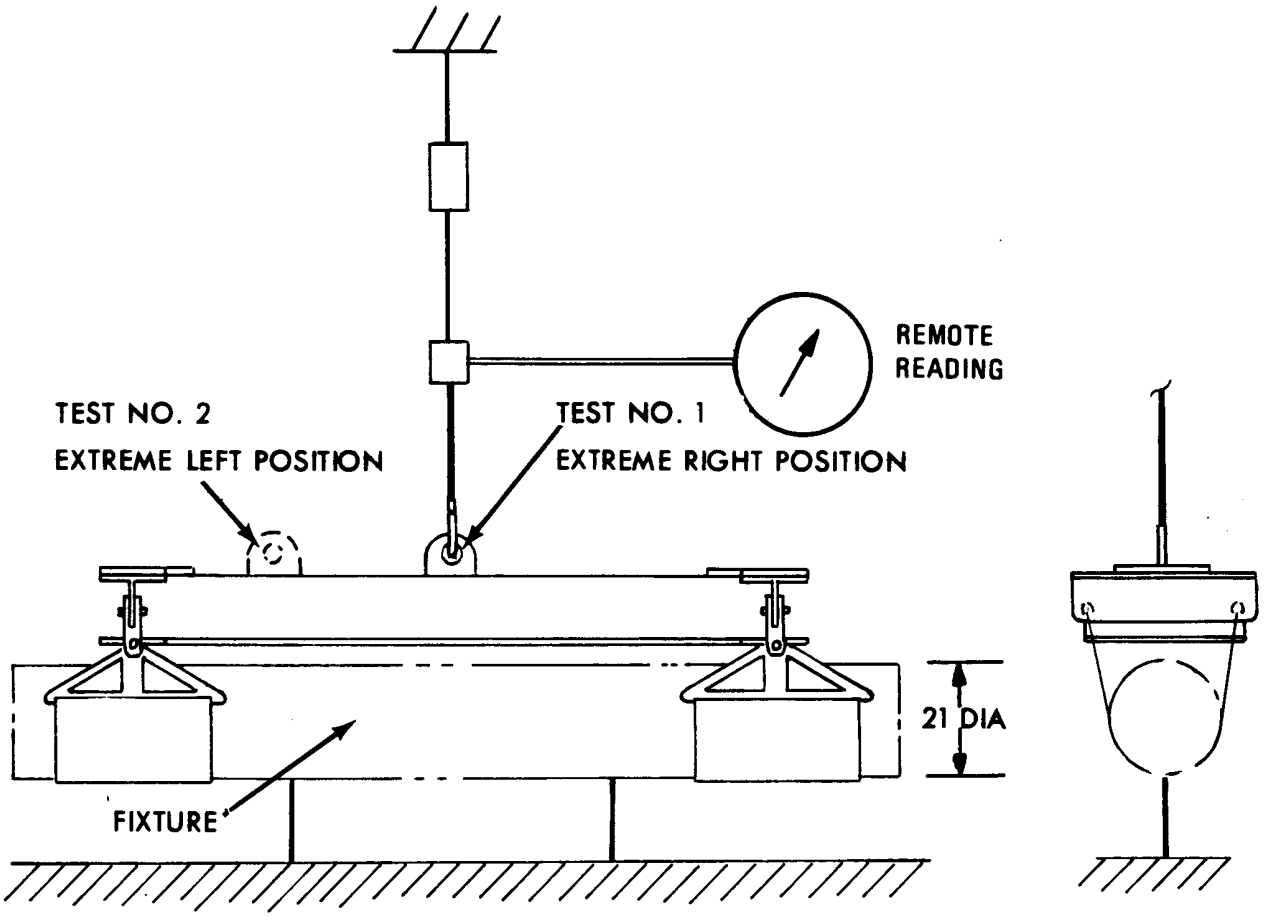

FIGURE 4-37. Test Arrangement, Lift Beam, Mk 44 Mod 0

BEAM, ENCANISTERED AUR HOISTING,
MK 45 MOD 0
DL 5167233
NSN 9G 6250-00-679-5084

SWL	TEST LOAD	TEST DURATION
4,000 POUNDS	8,000 POUNDS	2 MINUTES

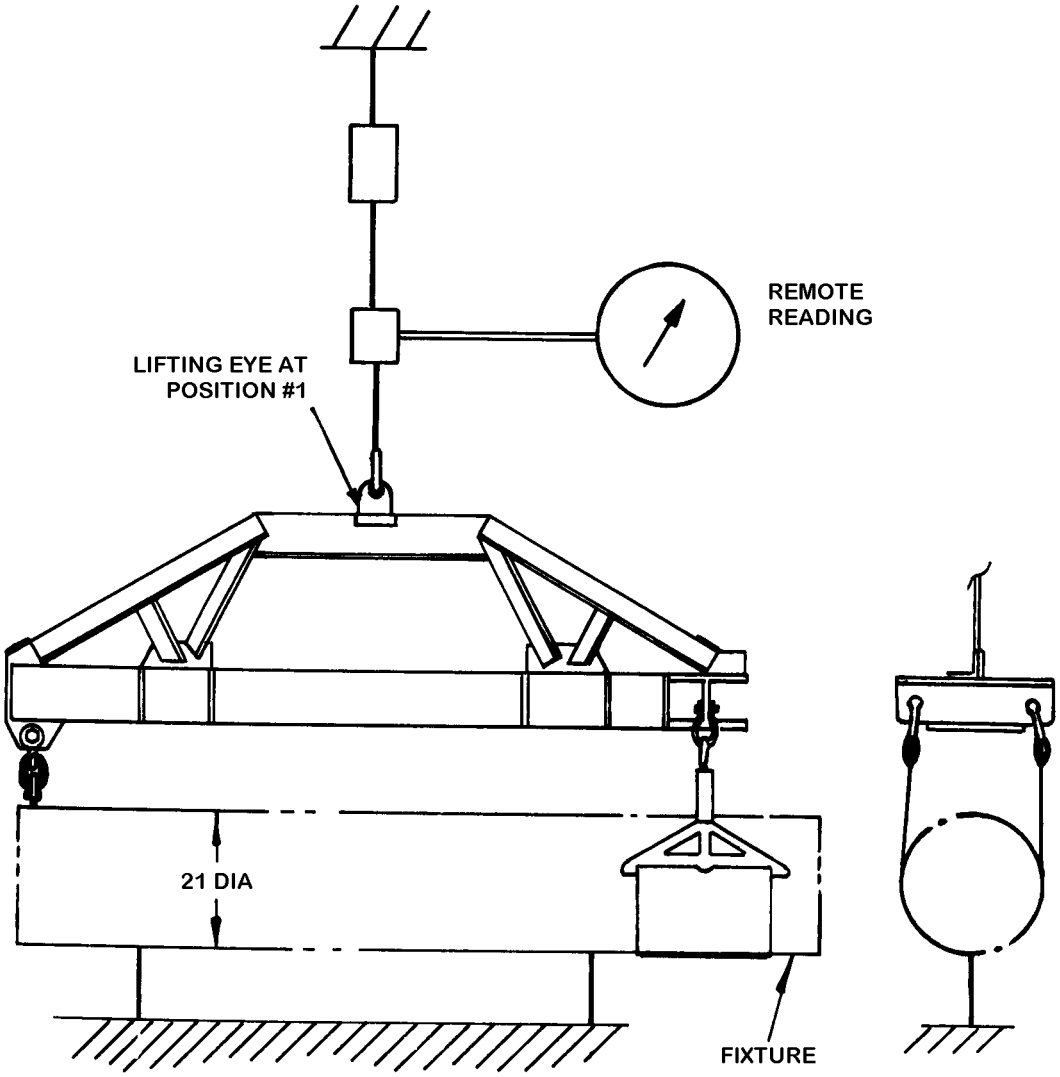

FIGURE 4-38. Test Arrangement, Encanistered AUR Hoisting Beam, Mk 45 Mod 0

BEAM, AUR CONTAINER HOISTING,
MK 46 MOD 0
DL 5167804
NSN TO BE ASSIGNED

SWL	TEST LOAD	TEST DURATION
7,000 POUNDS	14,000 POUNDS	2 MINUTES

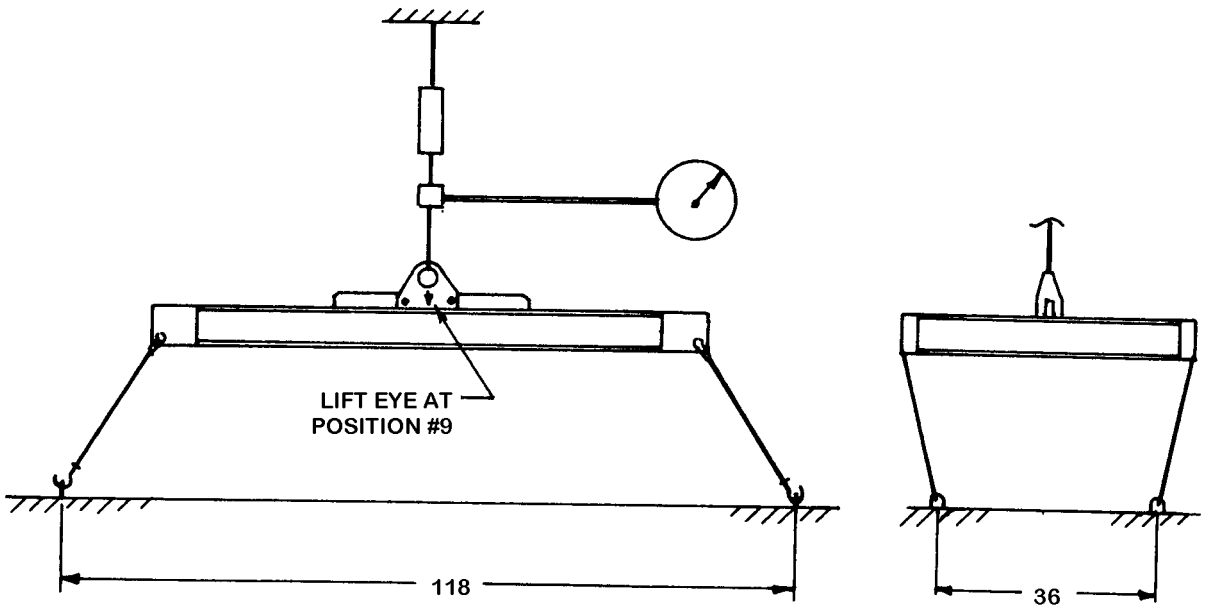

FIGURE 4-39. Test Arrangement, AUR Container Hoisting Beam, Mk 46 Mod 0

BEAM, CONTAINER HANDLING,
MK 49 MOD 0
DL 5167620
NSN 7H 1450-01-439-6024

SWL	TEST LOAD	TEST DURATION
1,000 POUNDS	1,200 POUNDS	2 MINUTES

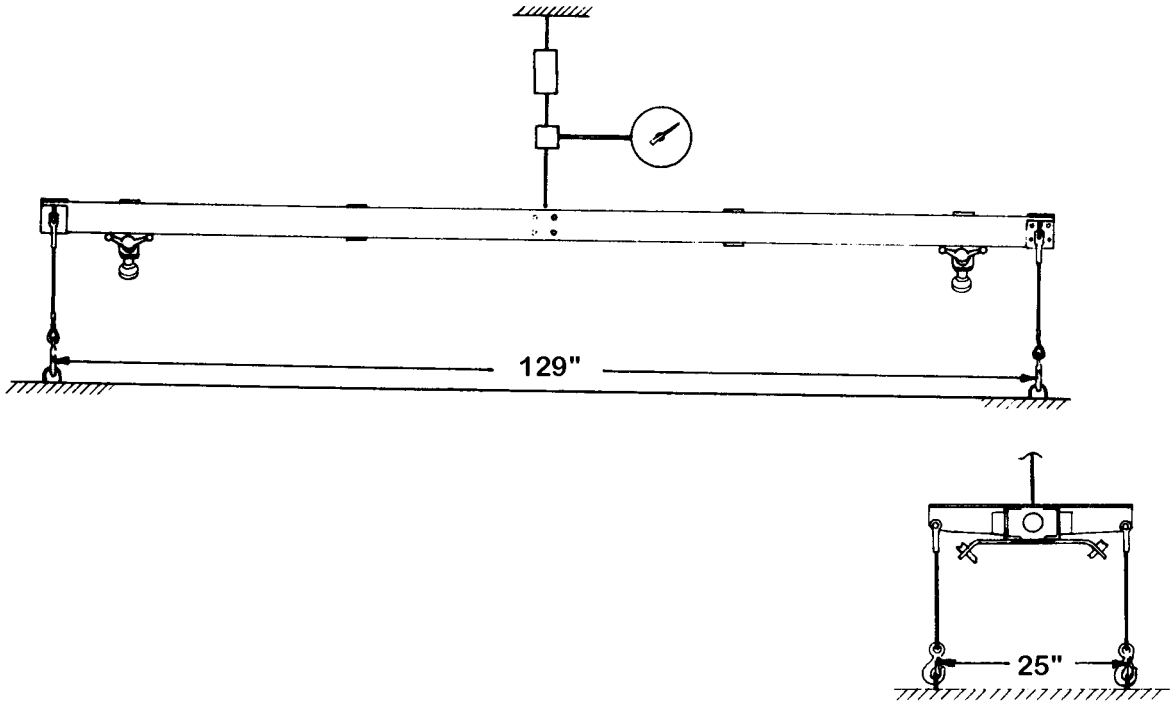

FIGURE 4-40. Test Arrangement, Container Handling Beam, Mk 49 Mod 0

BEAM, CANISTER ADAPTER LIFT,
MK 50 MOD 0
PL 5599196-9
NSN 8T 1450-01-262-1145

SWL	TEST LOAD	TEST DURATION
650 POUNDS	1,300 POUNDS	2 MINUTES

NOTE

Refer to chapter 3 for test fixture illustration and description.

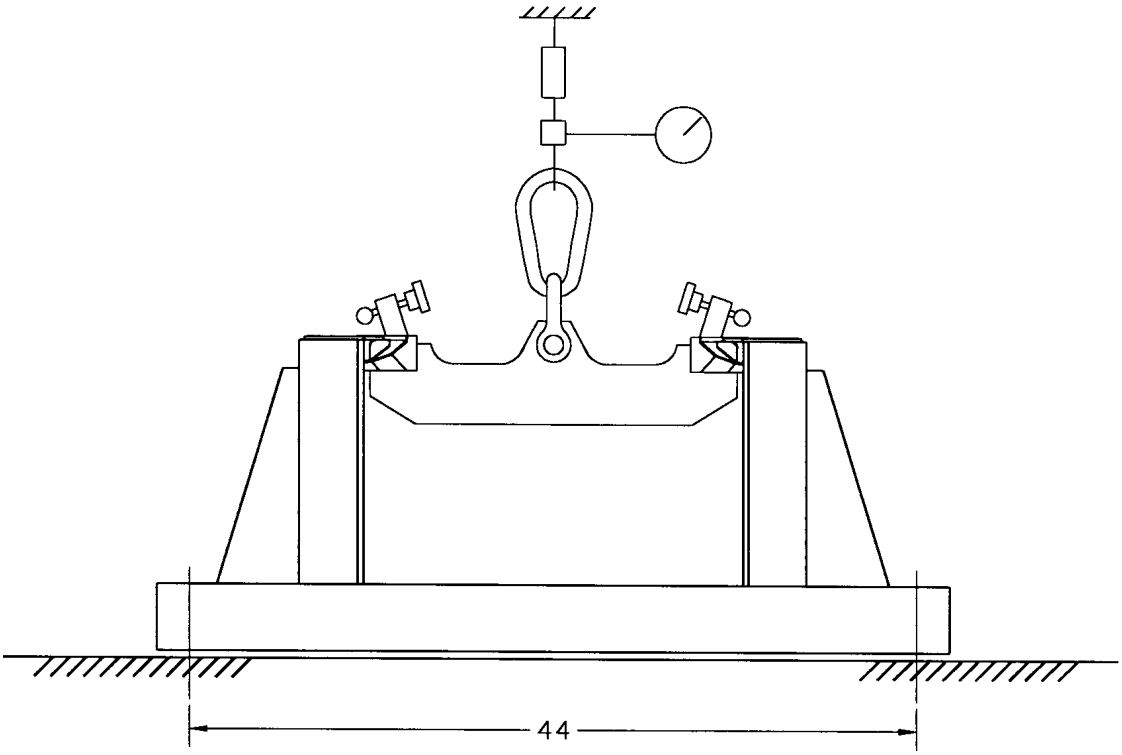

FIGURE 4-41. Test Arrangement, Canister Adapter Lift Beam, Mk 50 Mod 0

BEAM, VERTICAL LAUNCH ASROC MISSILE HOISTING
MK 51 MOD 0
DL 6204876
NSN TO BE ASSIGNED

SWL	TEST LOAD	TEST DURATION
1,750 POUNDS	3,500 POUNDS	2 MINUTES

NOTE

Refer to chapter 3 for test fixture illustration and description.

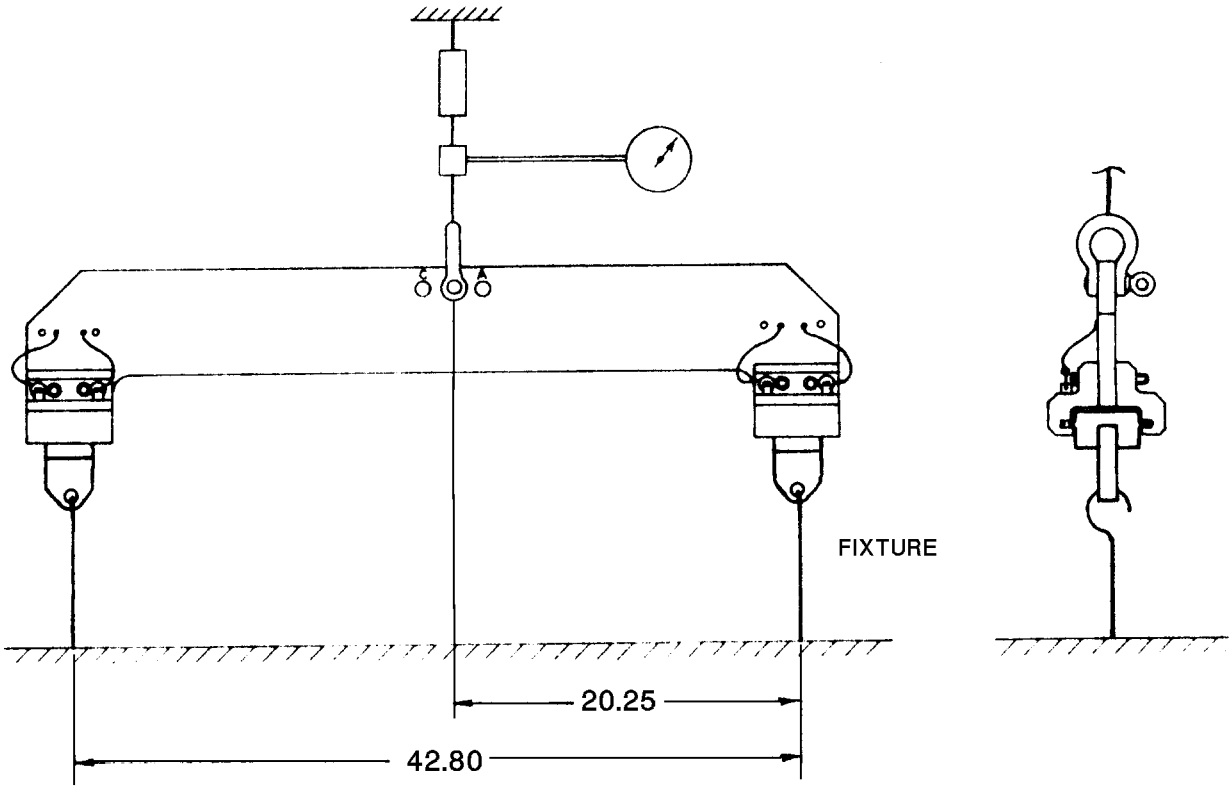

FIGURE 4-42. Test Arrangement, Vertical Launch ASROC (VLA) Missile Hoisting Beam, Mk 51 Mod 0

BEAM, CONTAINER HANDLING,
MK 52 MOD 0
DL 6212876
NSN 9Z 3940-01-324-5671

SWL	TEST LOAD	TEST DURATION
2,000 POUNDS	2,400 POUNDS	2 MINUTES

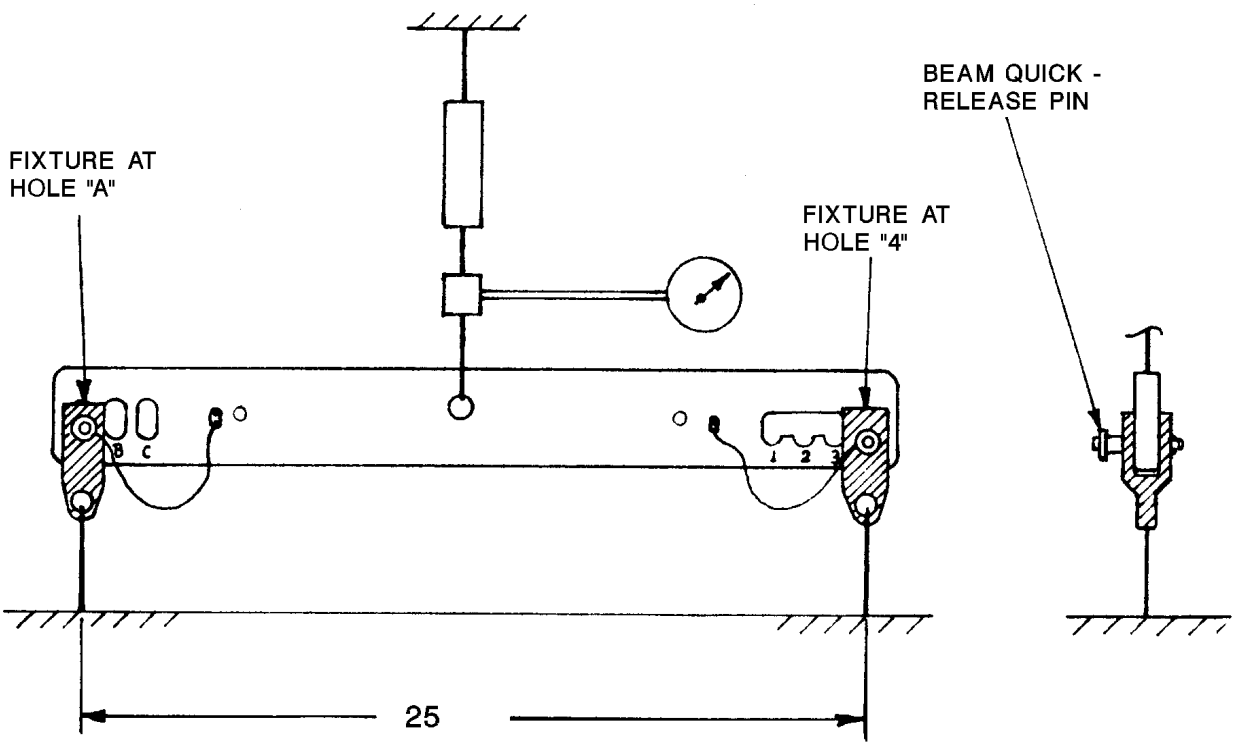

FIGURE 4-43. Test Arrangement, Container Handling Beam, Mk 52 Mod 0

BEAM, CONTAINER HANDLING
MK 52 MOD 1
DL 6213893
NSN 9Z 3940-01-453-8558

SWL	TEST LOAD	TEST DURATION
2,000 POUNDS	2,400 POUNDS	2 MINUTES

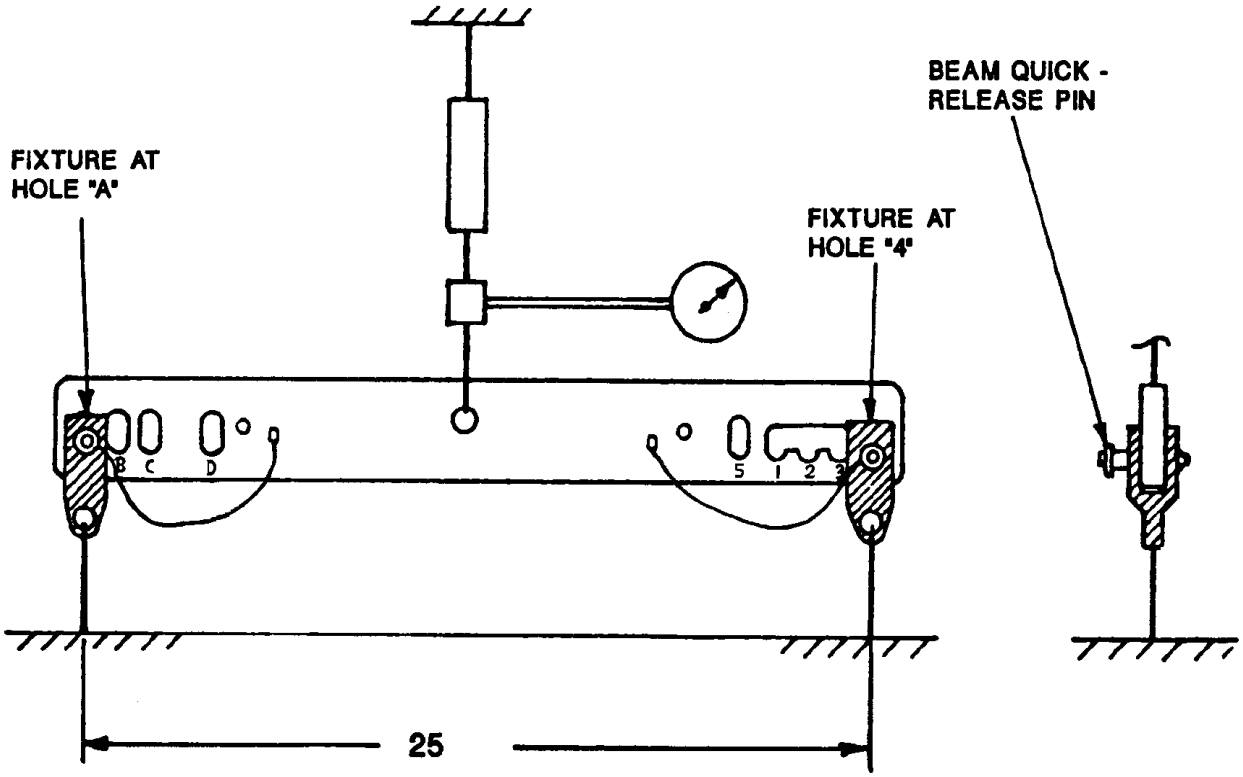

FIGURE 4-44. Test Arrangement, Container Handling Beam, Mk 52 Mod 1

BEAM, WARHEAD LIFT,
MK 53 MOD 0
DL 6212934
NSN 8T 1450-01-336-6650

SWL	TEST LOAD	TEST DURATION
85 POUNDS	102 POUNDS	2 MINUTES

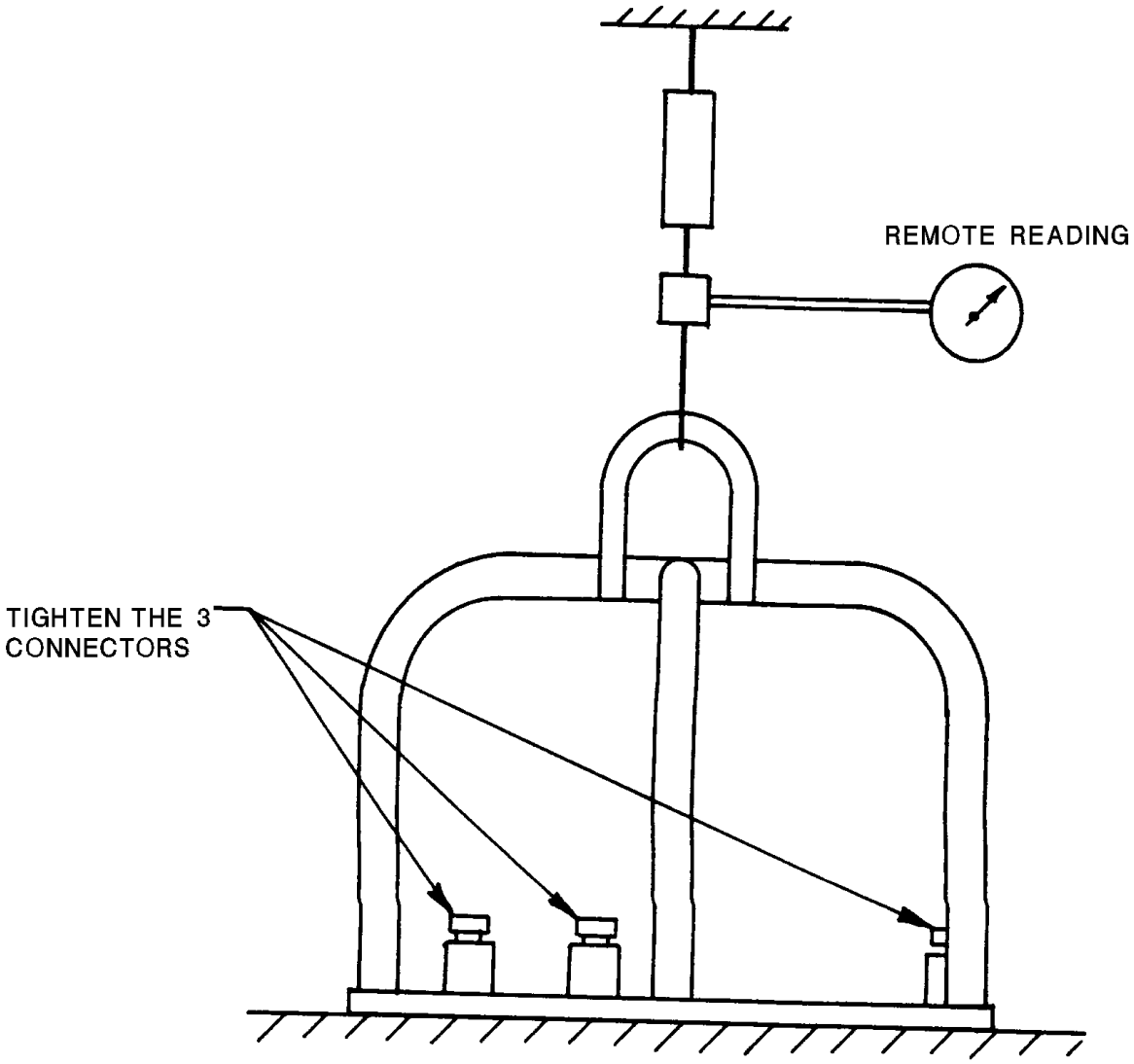

FIGURE 4-45. Test Arrangement, Warhead Lift Beam, Mk 53 Mod 0

BEAM, SLAM GUIDANCE SECTION
MK 54 MOD 0
DL 6212818
NSN 3C 1450-01-377-6497

SWL	TEST LOAD	TEST DURATION
400 POUNDS	480 POUNDS	2 MINUTES

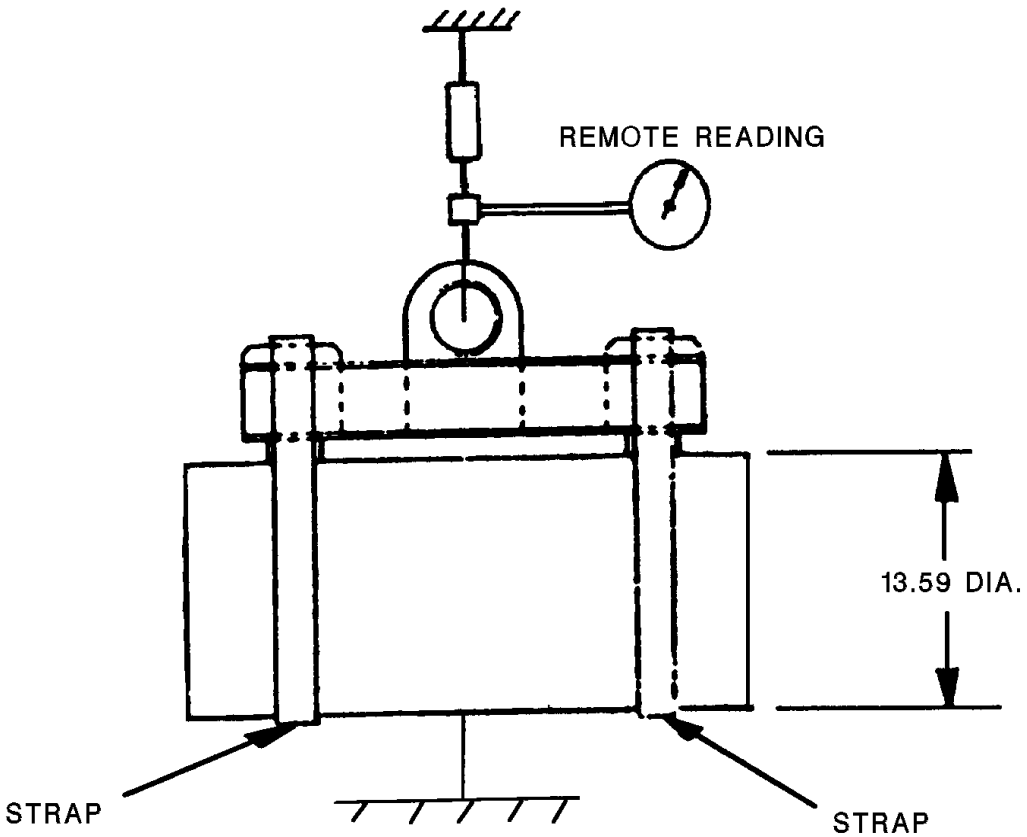

FIGURE 4-46. Test Arrangement, Beam, SLAM Guidance Section, Mk 54 Mod 0

BEAM, MINE NEUTRALIZATION VEHICLE
MK 56 MOD 0
DL 6212996
NSN 7H 3940-01-361-6004

SWL	TEST LOAD	TEST DURATION
3,100 POUNDS	6,200 POUNDS	2 MINUTES

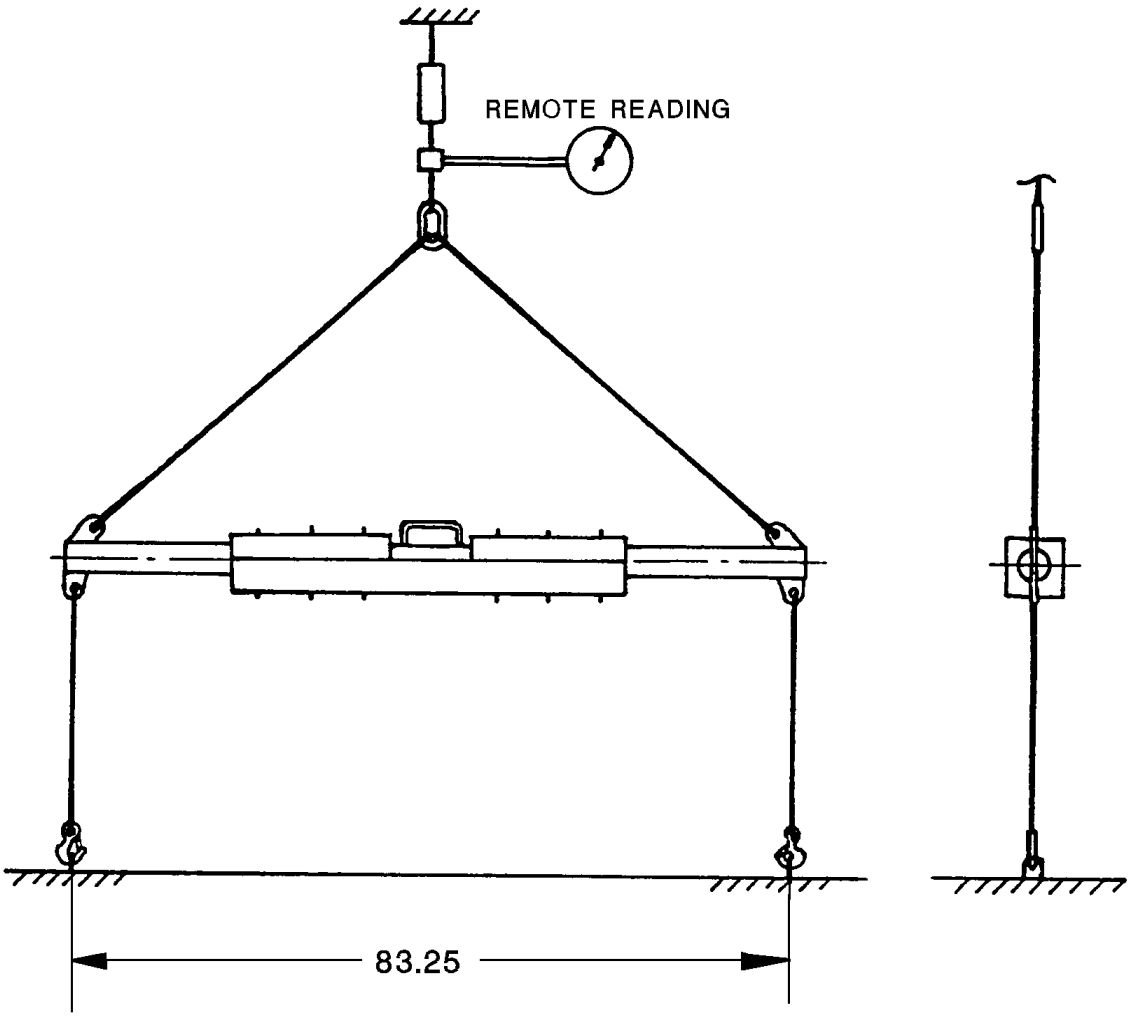

FIGURE 4-47. Test Arrangement, Beam, Mine Neutralization Vehicle, Mk 56 Mod 0

BEAM, BOOSTER LIFT
MK 57 MOD 0
DL 6213111
NSN 8T 1450-01-412-1641

SWL	TEST LOAD	TEST DURATION
1,570 POUNDS	1,884 POUNDS	5 MINUTES

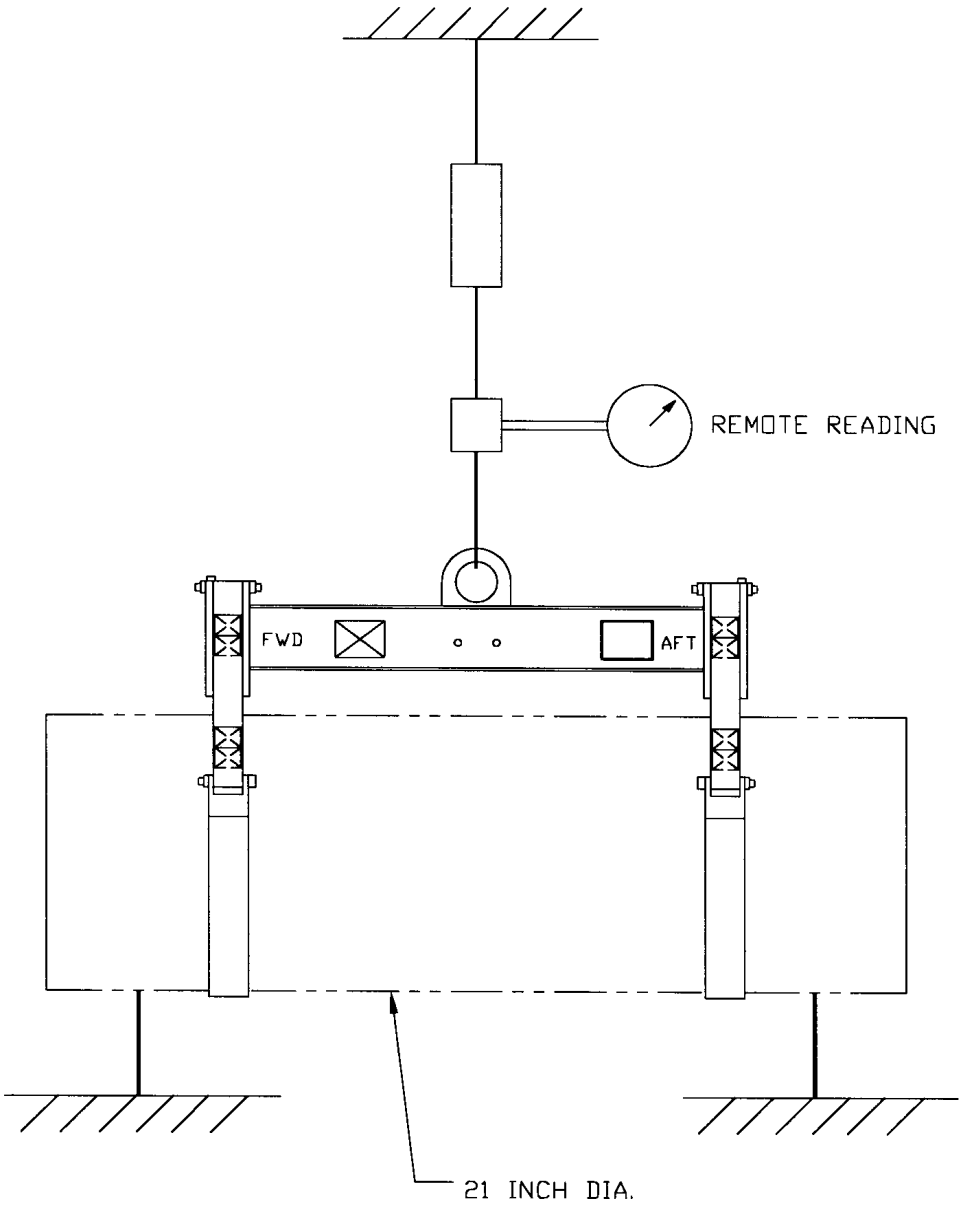

FIGURE 4-48. Test Arrangement, Booster Lift Beam, Mk 57 Mod 0

BEAM, UPPER STAGE, SM-2 BLK IV
MK 58 MOD 0
DL 6213086
NSN 8T 1450-01-421-4311

SWL	TEST LOAD	TEST DURATION
1,800 POUNDS	2,160 POUNDS	5 MINUTES

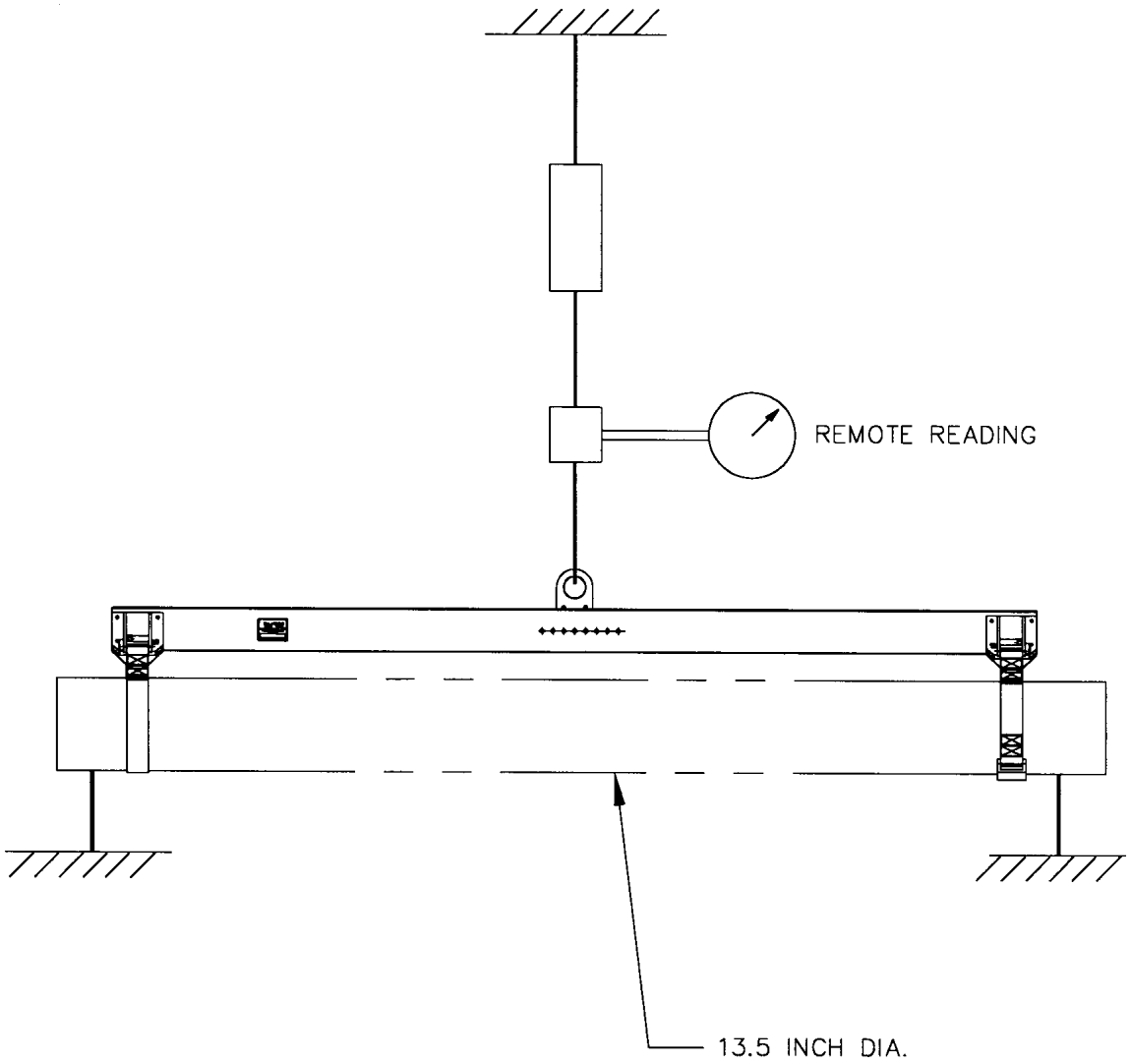

FIGURE 4-49. Test Arrangement, Upper Stage SM-2 BLK IV Beam, Mk 58 Mod 0

BEAM, GUIDANCE SECTION
MK 60 MOD 0
DL 6213342
NSN 8T 1450-01-392-8469

SWL	TEST LOAD	TEST DURATION
300 POUNDS	600 POUNDS	5 MINUTES

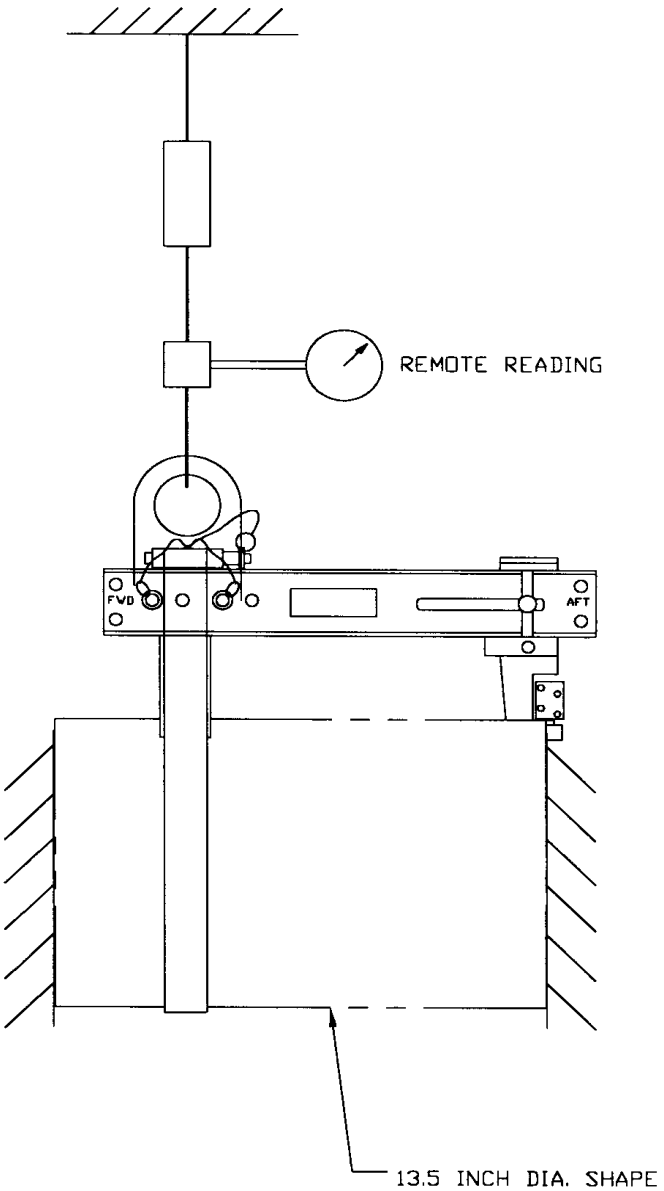

FIGURE 4-50. Test Arrangement, Guidance Section Beam, Mk 60 Mod 0

BEAM, HOISTING DTRM
MK 61 MOD 0
DL 6213300
NSN 8T 1450-01-421-4289

SWL	TEST LOAD	TEST DURATION
1,100 POUNDS	1,320 POUNDS	2 MINUTES

NOTE

Refer to chapter 3 for test fixture illustration and description.

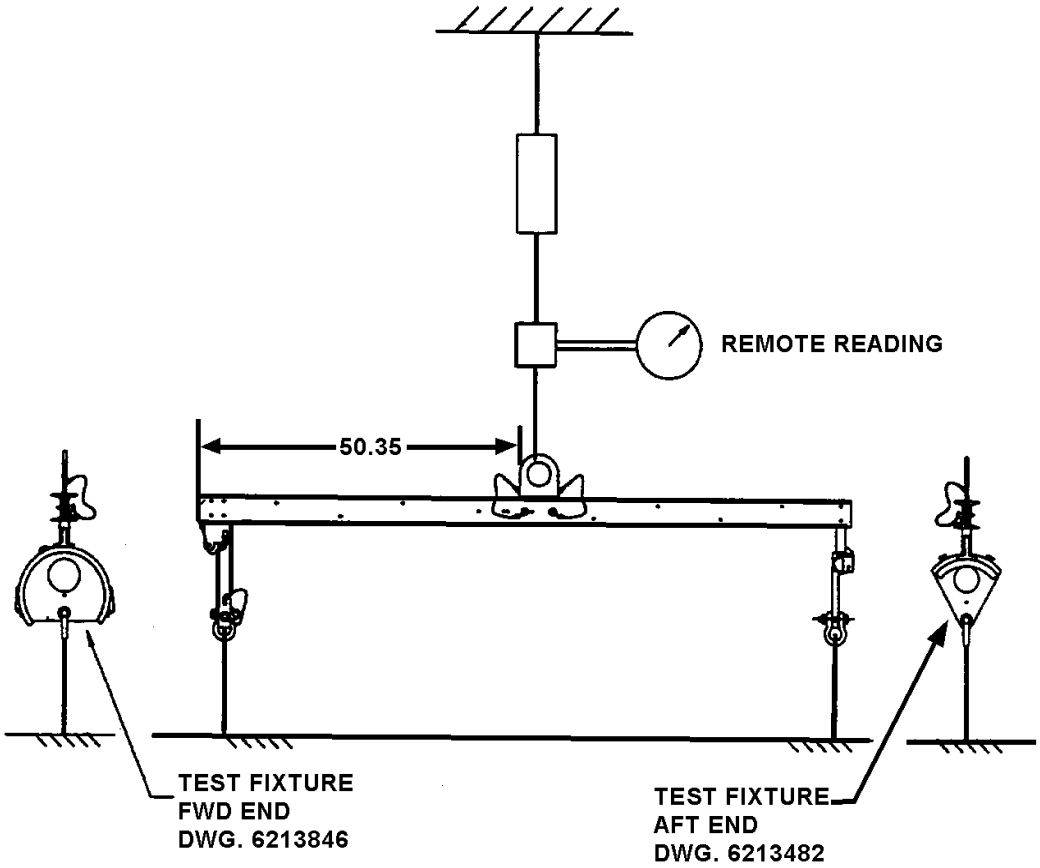

FIGURE 4-51. Test Arrangement, Hoisting DTRM Beam, Mk 61 Mod 0

BEAM
MK 62 MOD 0
DL 6213706
NSN 8T 1450-01-421-4305

SWL	TEST LOAD	TEST DURATION
200 POUNDS	240 POUNDS	2 MINUTES

NOTE

Refer to chapter 3 for test fixture illustration and description.

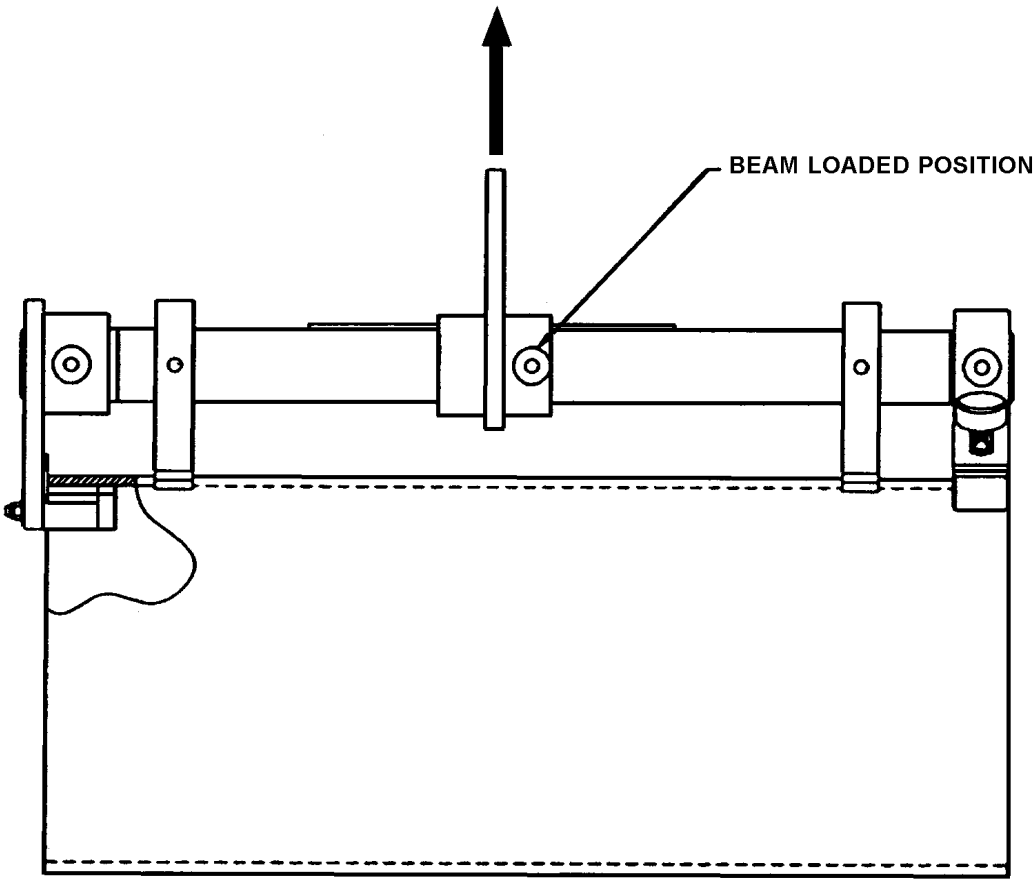

FIGURE 4-52. Test Arrangement, Beam, Mk 62 Mod 0

Section IV

BOOMS

4-5. GENERAL

Booms requiring testing are listed in table 4-4 with cross references to their drawing/DL/LD numbers; test arrangement figure number; maintenance index page (MIP) number/Intermediate and Depot Maintenance Instructions, OR-99/XXXXXXX; weight; rated SWL; applied test load and test duration of items used, both ashore and aboard ship. Prior to testing, each boom shall be visually inspected to locate obvious defects that would be cause for rejection, thus preventing the occurrence of a dangerous situation. Accessory fittings and hardware (safety hooks, chain links, lifting eyes, etc.) that are damaged or do not comply with applicable drawings and specifications, or loose or missing parts shall be cause for rejection. Before, during, and after testing boom, the precautions indicated in paragraphs 2-5.1, 2-5.2, and 2-5.3 shall be observed.

Table 4-4. Quick Reference Data, Booms

ITEM NOMENCLATURE	DRAWING OR DL/LD	FIGURE NO.	MIP NO. OR OR-99/	ITEM WEIGHT (LBS)	SAFE WORKING LOAD (LBS)	TEST LOAD (LBS)	TEST DURATION (MIN.)
Boom, Forklift Truck, Mk 5 Mod 0	DL 2644743	4-53 (1) 4-53 (2) 4-53 (3) 4-53 (4)	7721/R20		*700 #6,000 +4,100 @2,300	840 7,200 4,920 2,760	2 2 2 2

* Test No. 1

Test No. 2

+ Test No. 3

@ Test No. 4

NOTE: Test frequency columns have been deleted in accordance with paragraph 4-1.

BOOM, FORKLIFT TRUCK
MK 5 MOD 0
DL 2644743
NSN 7H 1450-00-505-0695

TEST NO.	SWL	TEST LOAD	TEST DURATION
1	700 POUNDS	840 POUNDS	2 MINUTES
2	6,000 POUNDS	7,200 POUNDS	2 MINUTES
3	4,100 POUNDS	4,920 POUNDS	2 MINUTES
2	2,300 POUNDS	2,760 POUNDS	2 MINUTES

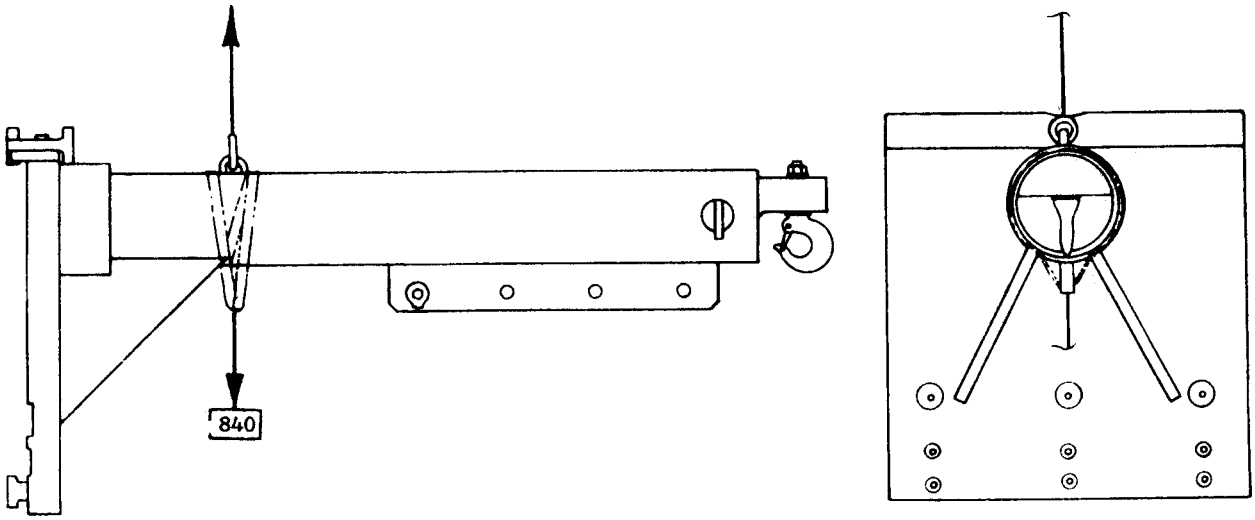

Test No. 1

FIGURE 4-53. Test Arrangement, Forklift Truck Boom, Mk 5 Mod 0 (Sheet 1 of 4)

BOOM, FORKLIFT TRUCK
MK 5 MOD 0
DL 2644743
NSN 7H 1450-00-505-0695

TEST NO.	SWL	TEST LOAD	TEST DURATION
1	700 POUNDS	840 POUNDS	2 MINUTES
2	6,000 POUNDS	7,200 POUNDS	2 MINUTES
3	4,100 POUNDS	4,920 POUNDS	2 MINUTES
2	2,300 POUNDS	2,760 POUNDS	2 MINUTES

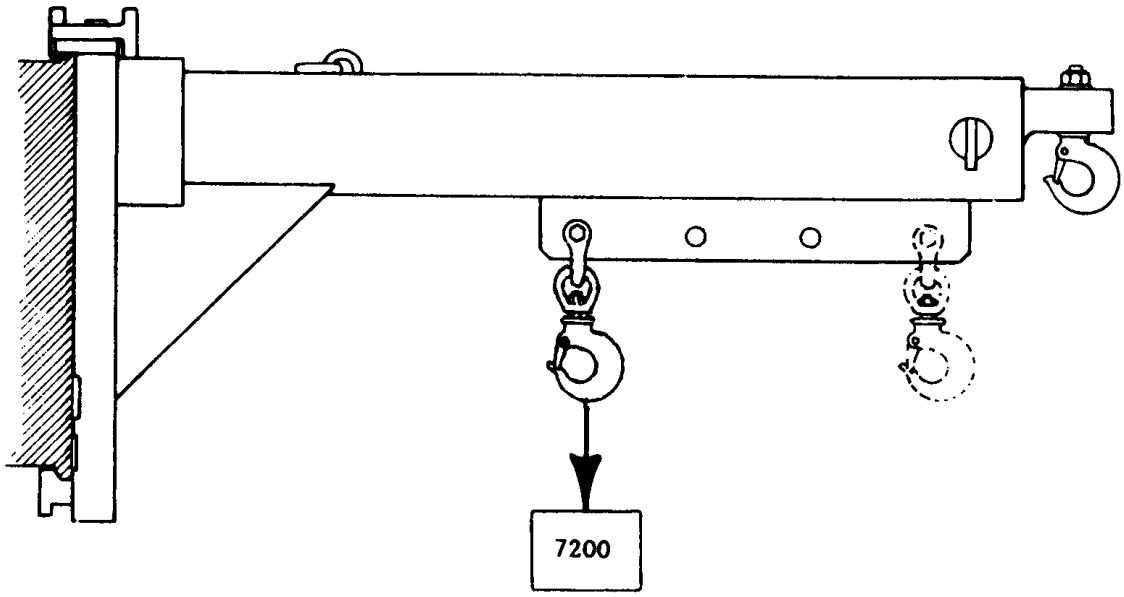

Test No. 2

FIGURE 4-53. Test Arrangement, Forklift Truck Boom, Mk 5 Mod 0 (Sheet 2 of 4)

BOOM, FORKLIFT TRUCK
MK 5 MOD 0
DL 2644743
NSN 7H 1450-00-505-0695

TEST NO.	SWL	TEST LOAD	TEST DURATION
1	700 POUNDS	840 POUNDS	2 MINUTES
2	6,000 POUNDS	7,200 POUNDS	2 MINUTES
3	4,100 POUNDS	4,920 POUNDS	2 MINUTES
2	2,300 POUNDS	2,760 POUNDS	2 MINUTES

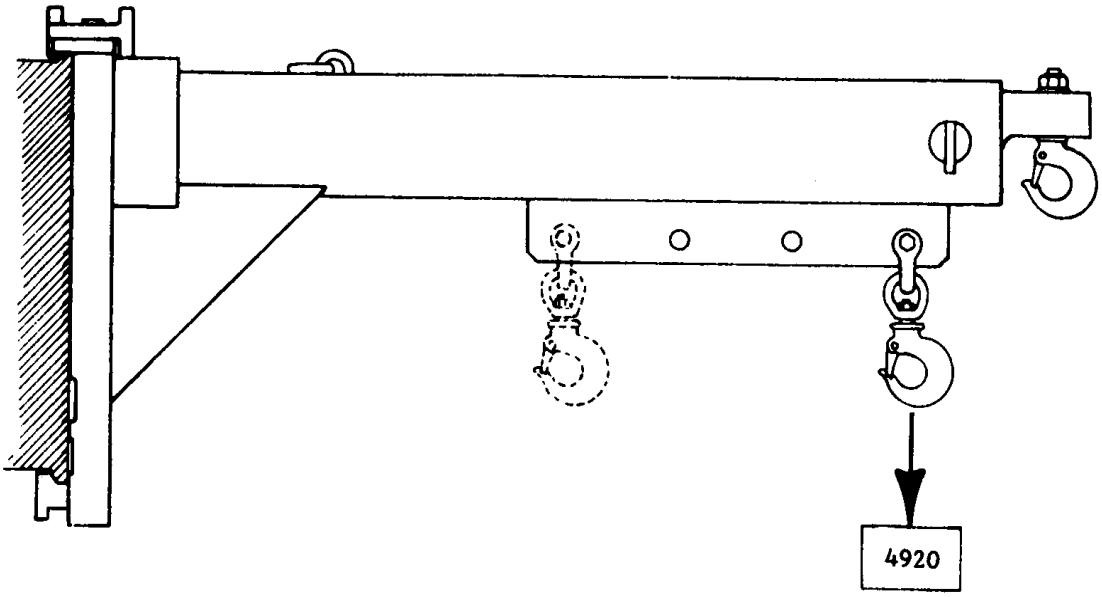

Test No. 3

FIGURE 4-53. Test Arrangement, Forklift Truck Boom, Mk 5 Mod 0 (Sheet 3 of 4)

BOOM, FORKLIFT TRUCK
MK 5 MOD 0
DL 2644743
NSN 7H 1450-00-505-0695

TEST NO.	SWL	TEST LOAD	TEST DURATION
1	700 POUNDS	840 POUNDS	2 MINUTES
2	6,000 POUNDS	7,200 POUNDS	2 MINUTES
3	4,100 POUNDS	4,920 POUNDS	2 MINUTES
2	2,300 POUNDS	2,760 POUNDS	2 MINUTES

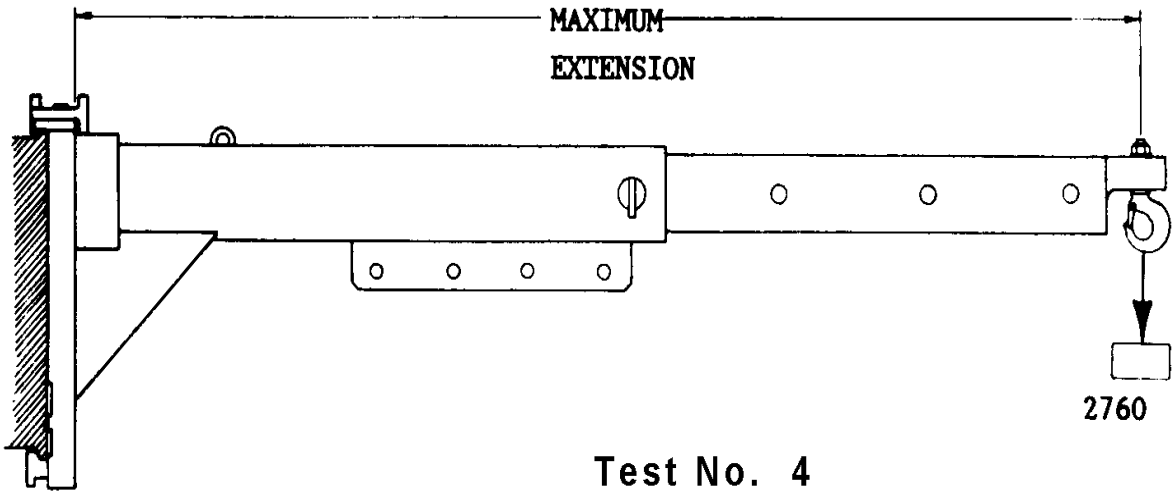

FIGURE 4-53. Test Arrangement, Forklift Truck Boom, Mk 5 Mod 0 (Sheet 4 of 4)

Section V

CARRIERS

4-6. GENERAL

Carriers requiring testing are listed in table 4-5 with cross references to their drawing/DL/LD numbers; test arrangement figure numbers; maintenance index page (MIP) number/Intermediate and Depot Maintenance Instructions, OR-99/XXXXXXX; weight; rated SWL; applied test load and test duration of items used both ashore and aboard ship. Prior to testing, each carrier shall be visually inspected to locate obvious defects that would be cause for rejection, thus preventing the occurrence of a dangerous situation. Accessory fittings and hardware (safety hooks, chain links, wire rope or cables, lifting eyes, quick-release pins, etc.) that are damaged or do not comply with applicable drawings and specifications, or loose or missing parts shall be cause for rejection. Before, during, and after testing carriers, the precautions indicated in paragraphs 2-5.1, 2-5.2, and 2-5.3 shall be observed.

Table 4-5. Quick Reference Data, Carriers

ITEM NOMENCLATURE	DRAWING OR DL/LD	FIGURE NO.	MIP NO. OR OR-99/	ITEM WEIGHT (LBS)	SAFE WORKING LOAD (LBS)	TEST LOAD (LBS)	TEST DURATION (MIN.)
Carrier, 16-Inch Powder Tank Mk 2 Mod 0	LD 167064	4-54		10	500	1,000	2
Carrier, 16-Inch Projectile, Mk 3 Mod 4	LD 138973	4-55		100	2,700	5,400	2
Carrier, 16-Inch Projectile, Mk 3 Mod 6	LD 167097	4-56		90	2,700	5,400	2
Carrier, Bomb, Mk 4 Mod 0	LD 908024	4-57	7321/R20	12	2,500	5,000	2
Carrier, Sustainer, Guided Missile, Mk 34 Mod 1	LD 288965	4-58		10	600	1,200	2
Carrier, Mine, Mk 46 Mod 1	DL 2642669	4-59	7321/R25	18	2,500	5,000	2
Carrier, Sustainer, Mk 48 Mod 0	DL 2482989	4-60	7221/R48	19	800	1,600	2
Carrier, Weapons, Mk 51 Mod 1	DL 651AS100	4-61		20	4,000	8,000	2
Carrier, Guided Weapon, Mk 52 Mod 1	Dwg 67A212F1	4-62 (1) 4-62 (2)		19	*100 #100	200 200	2 2
Carrier, 16-Inch Powder Tank, Mk 54 Mod 1	DL 5167166	4-63		16.5	430	860	2
Carrier, Weapon, Mk 55 Mod 1	DL 5166315	4-64	7321/R30	18	3,000	6,000	2
Carrier, Spider, Mk 60 Mod 0	DL 5167288	4-65	89BR000	9	200	400	2
Carrier, Spider, Mk 61 Mod 0	DL 5167440	4-66	89BS000	9	200	400	2

* Test No. 1
\# Test No. 2
NOTE: Test frequency columns have been deleted in accordance with paragraph 4-1.

CARRIER, 16-INCH POWDER TANK,
MK 2 MOD 0
LD 167064
NSN 7H 1320-00-389-4531

SWL	TEST LOAD	TEST DURATION
500 POUNDS	1,000 POUNDS	2 MINUTES

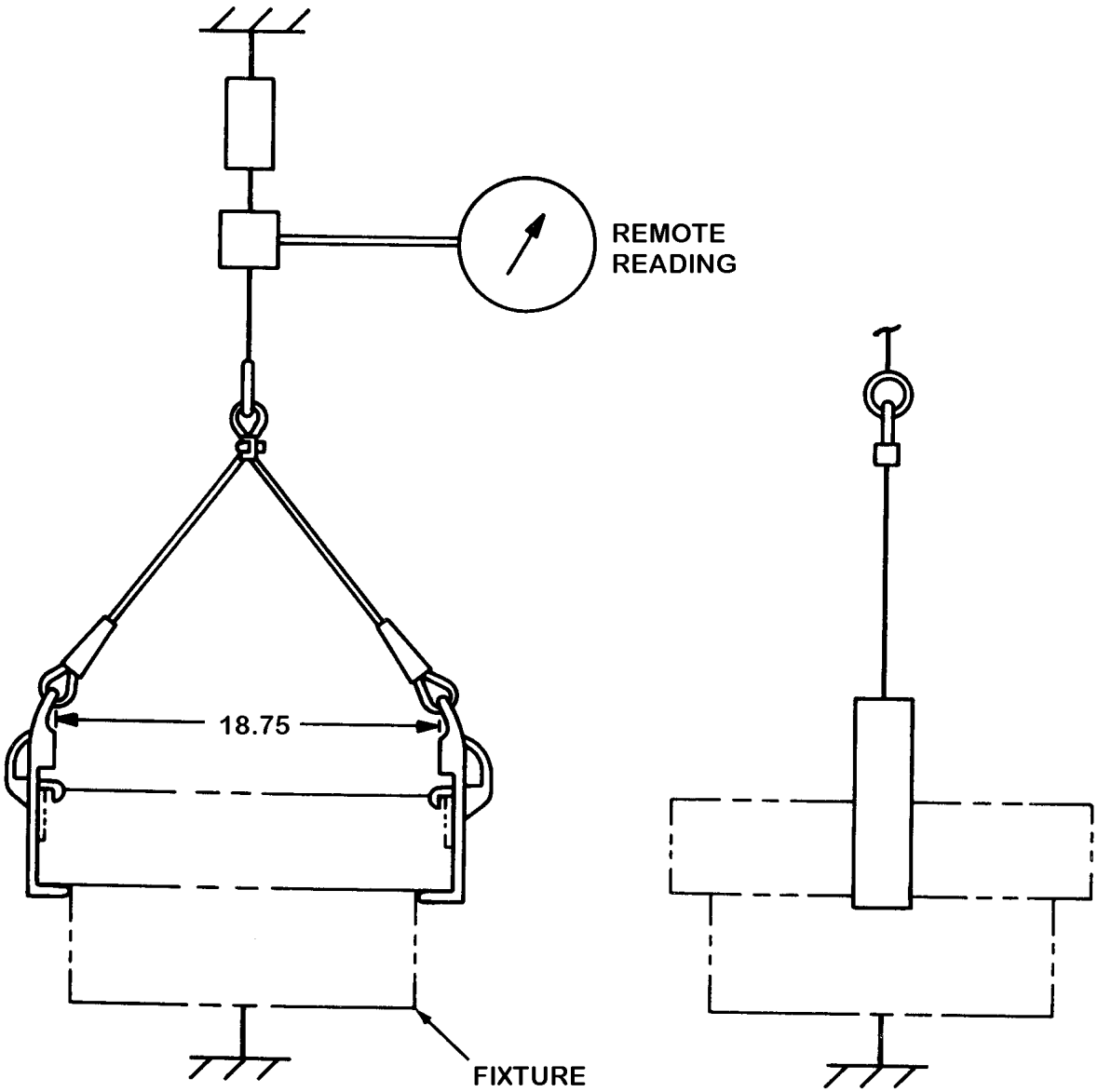

FIGURE 4-54. Test Arrangement, 16-Inch Powder Tank Carrier, Mk 2 Mod 0

CARRIER, 16-INCH PROJECTILE,
MK 3 MOD 4
LD 138973
NSN 7H 2350-00-389-4524

SWL	TEST LOAD	TEST DURATION
2,700 POUNDS	5,400 POUNDS	2 MINUTES

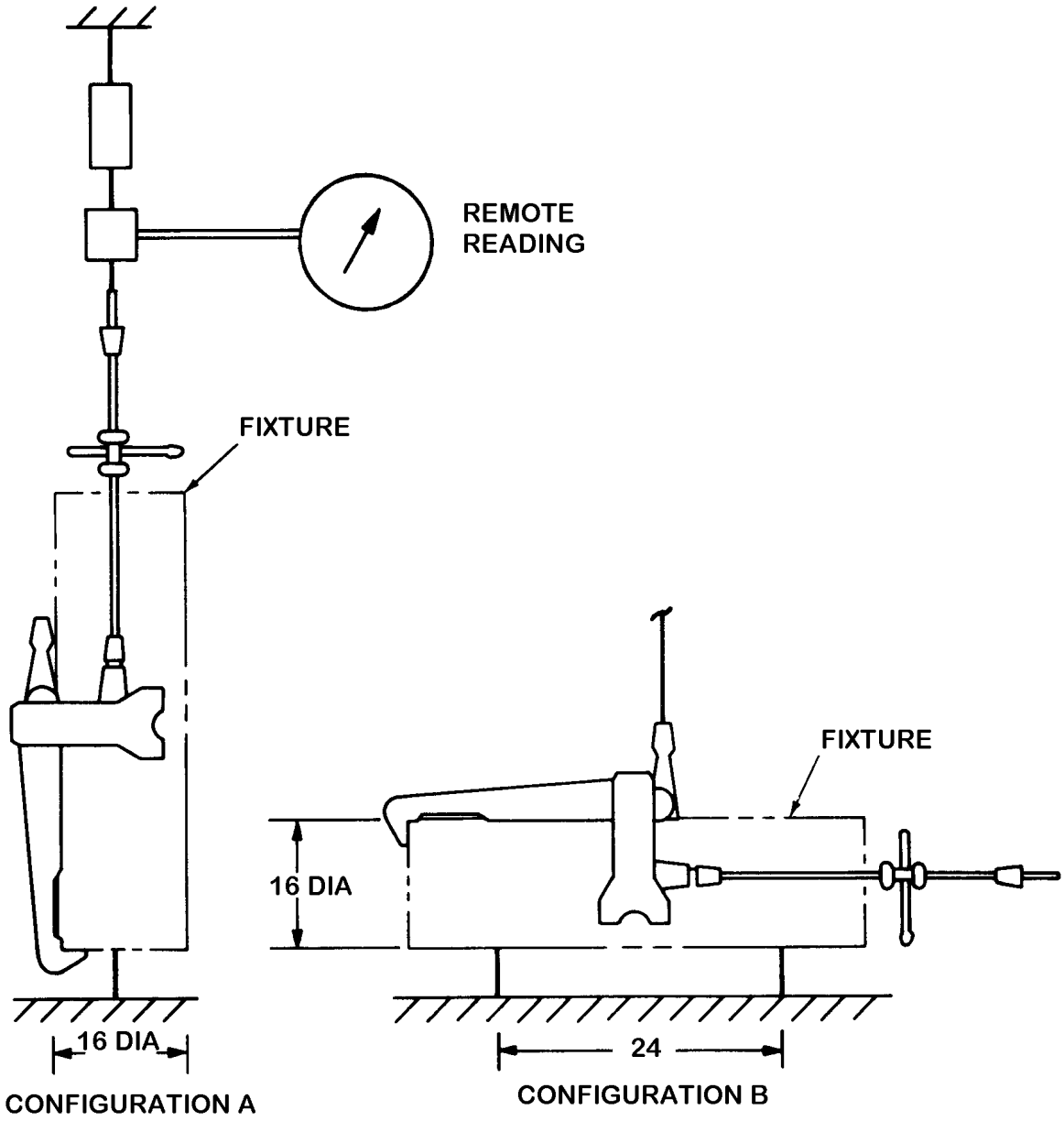

FIGURE 4-55. Test Arrangement, 16-Inch Projectile Carrier, Mk 3 Mod 4

CARRIER, 16-INCH PROJECTILE,
MK 3 MOD 6
LD 167097
NSN 7H 2350-00-389-4535

SWL	TEST LOAD	TEST DURATION
2,700 POUNDS	5,400 POUNDS	2 MINUTES

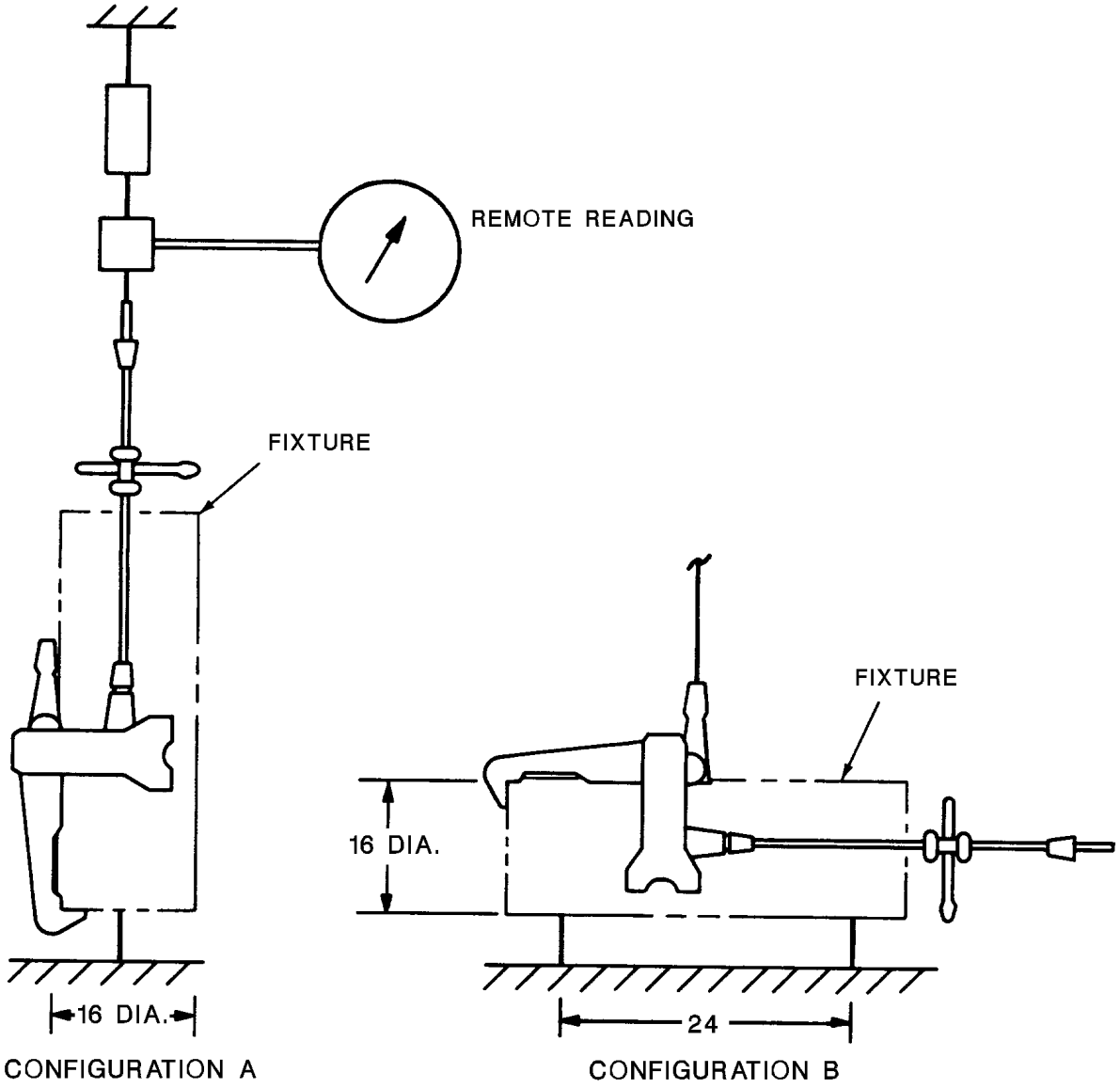

FIGURE 4-56. Test Arrangement, 16-Inch Projectile Carrier, Mk 3 Mod 6

CARRIER, BOMB,
MK 4 MOD 0
LD 908024
NSN 9C 1450-01-024-1736

SWL	TEST LOAD	TEST DURATION
2,500 POUNDS	5,000 POUNDS	2 MINUTES

NOTE

Refer to chapter 3 for test fixture illustration and description.

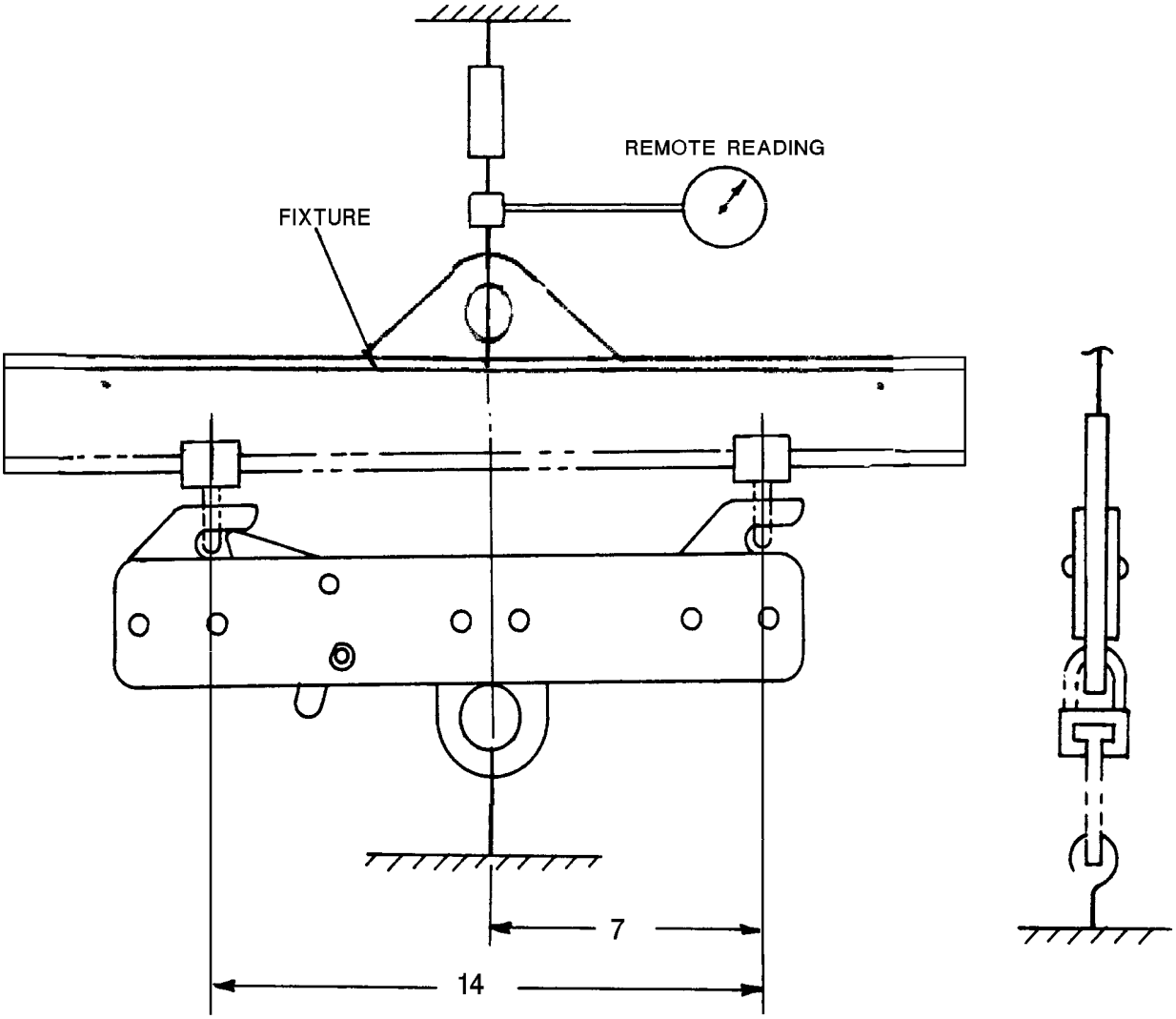

FIGURE 4-57. Test Arrangement, Bomb Carrier, Mk 4 Mod 0

CARRIER, SUSTAINER,
MK 34 MOD 1
LD 288965
NSN 7H 3940-00-653-3635

SWL	TEST LOAD	TEST DURATION
600 POUNDS	1,200 POUNDS	2 MINUTES

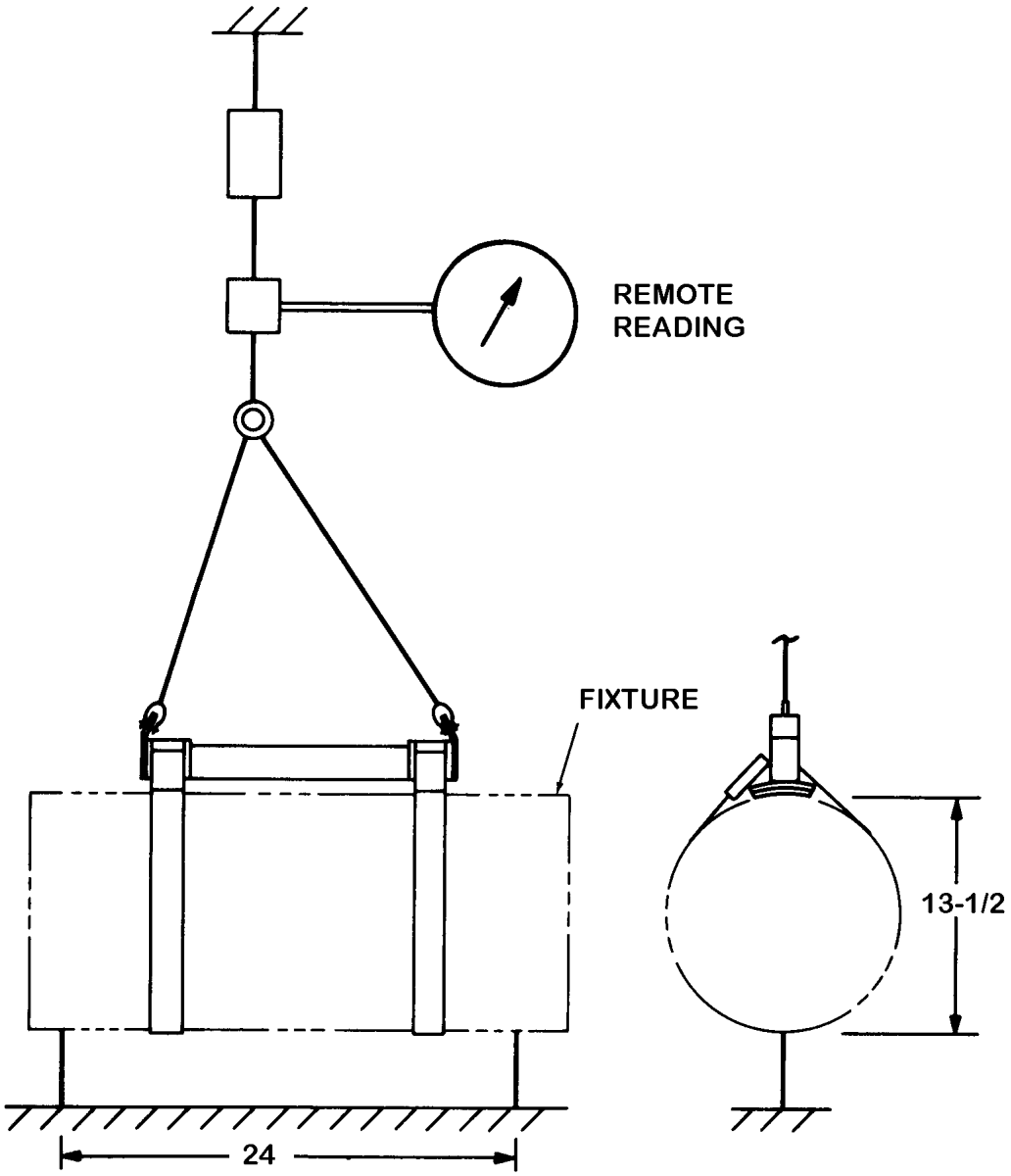

FIGURE 4-58. Test Arrangement, Sustainer Carrier, Mk 34 Mod 1

CARRIER, MINE,
MK 46 MOD 1
DL 2642669
NSN 9Z 3940-00-969-1109

SWL	TEST LOAD	TEST DURATION
2,500 POUNDS	5,000 POUNDS	2 MINUTES

NOTE

Refer to chapter 3 for test fixture illustration and description.

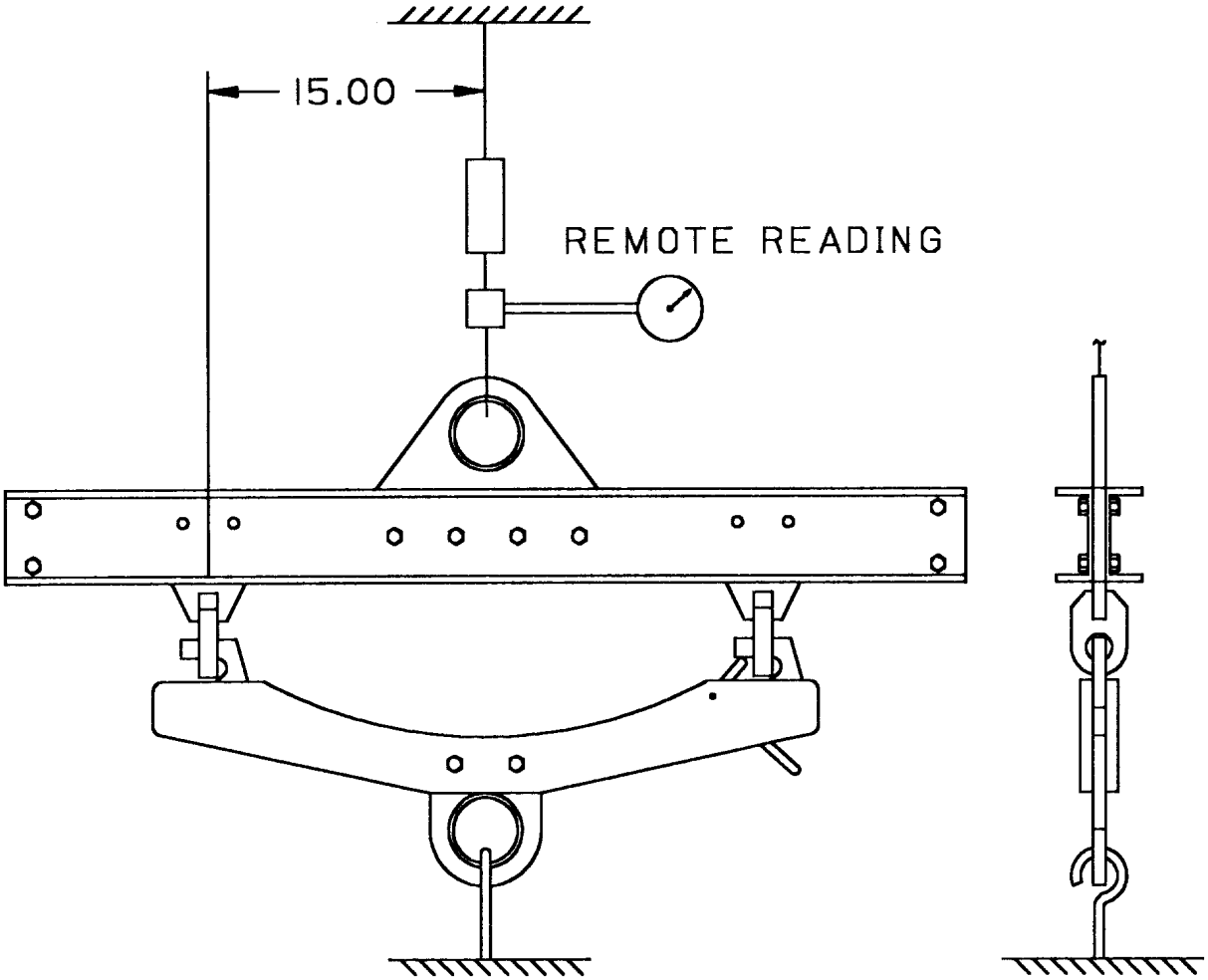

FIGURE 4-59. Test Arrangement, Mine Carrier, Mk 46 Mod 1

CARRIER, SUSTAINER,
MK 48 MOD 0
DL 2482989
NSN 8T 1450-01-336-1461

SWL	TEST LOAD	TEST DURATION
800 POUNDS	1,600 POUNDS	2 MINUTES

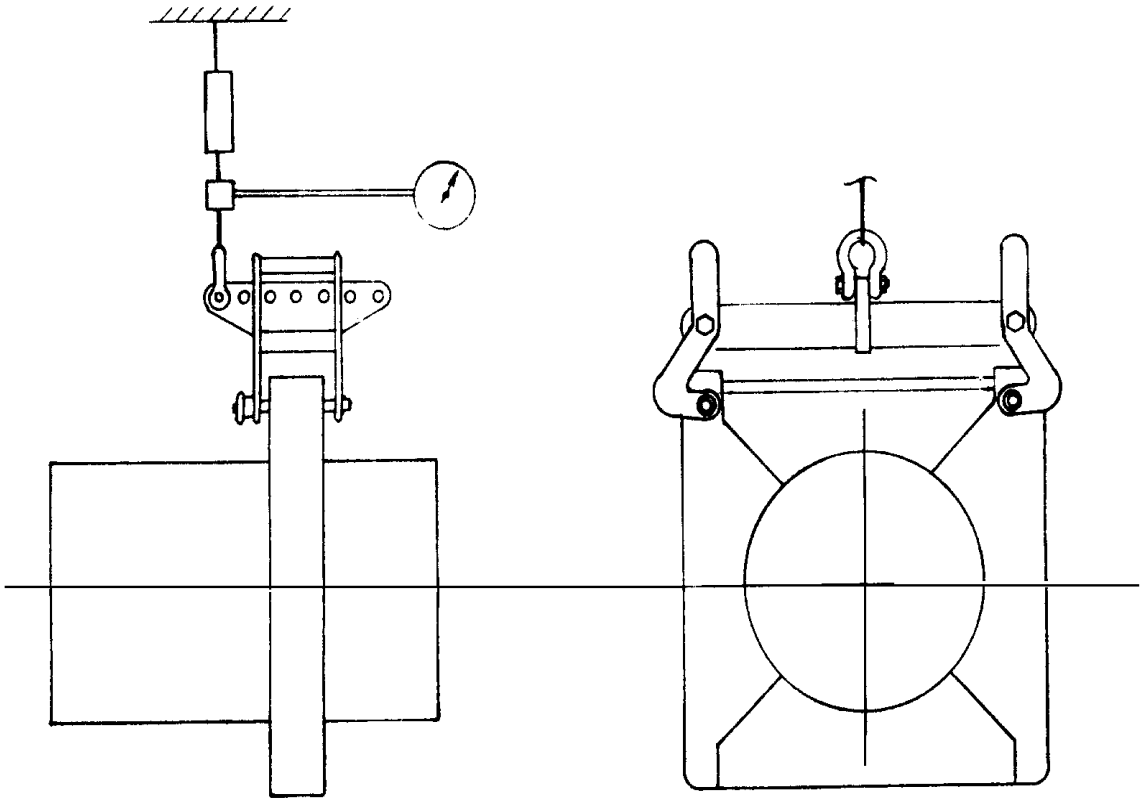

FIGURE 4-60. Test Arrangement, Sustainer Carrier, Mk 48 Mod 0

CARRIER, WEAPONS,
MK 51 MOD 1
DL 651AS100
NSN 1H 1398-00-190-6719

SWL	TEST LOAD	TEST DURATION
4,000 POUNDS	8,000 POUNDS	2 MINUTES

NOTE

Refer to chapter 3 for test fixture illustration and description.

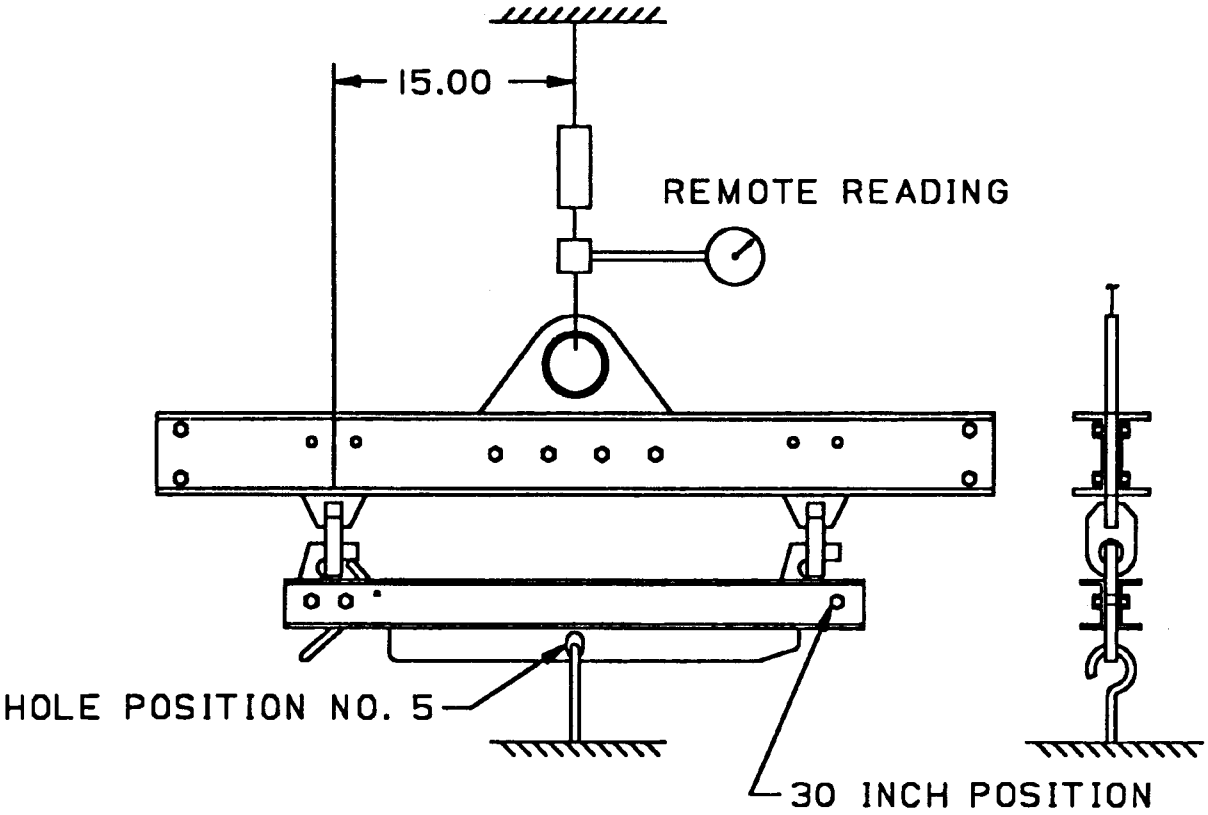

FIGURE 4-61. Test Arrangement, Weapons Carrier, Mk 51 Mod 1

CARRIER, GUIDED WEAPON
MK 52 MOD 1
DWG. 67A212F1
NSN 6M 1450-00-808-9563

SWL	TEST LOAD	TEST DURATION
100 POUNDS	200 POUNDS	2 MINUTES

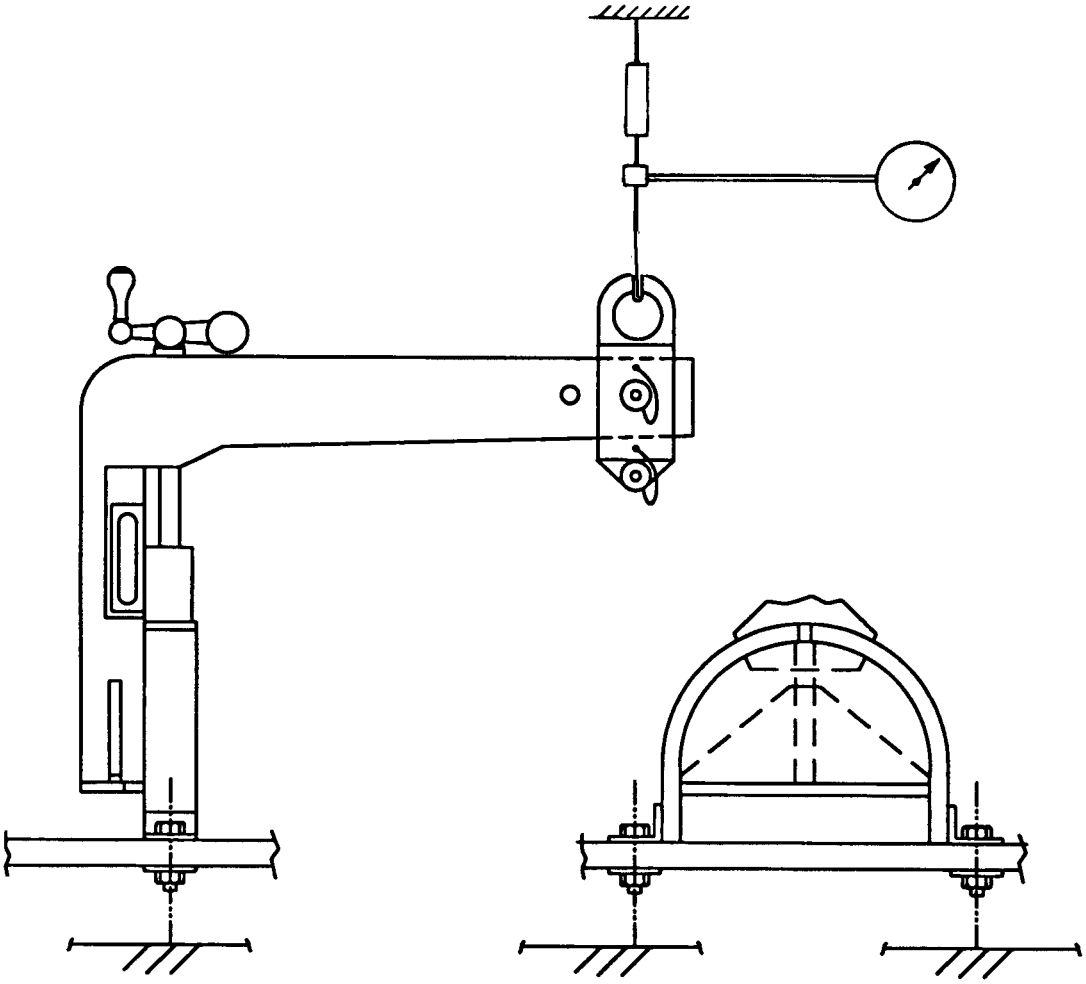

Test No. 1

FIGURE 4-62. Test Arrangement, Guided Weapon Carrier, MK 52 Mod 1 (Sheet 1 of 2)

CARRIER, GUIDED WEAPON
MK 52 MOD 1
DWG. 67A212F1
NSN 6M 1450-00-808-9563

SWL	TEST LOAD	TEST DURATION
100 POUNDS	200 POUNDS	2 MINUTES

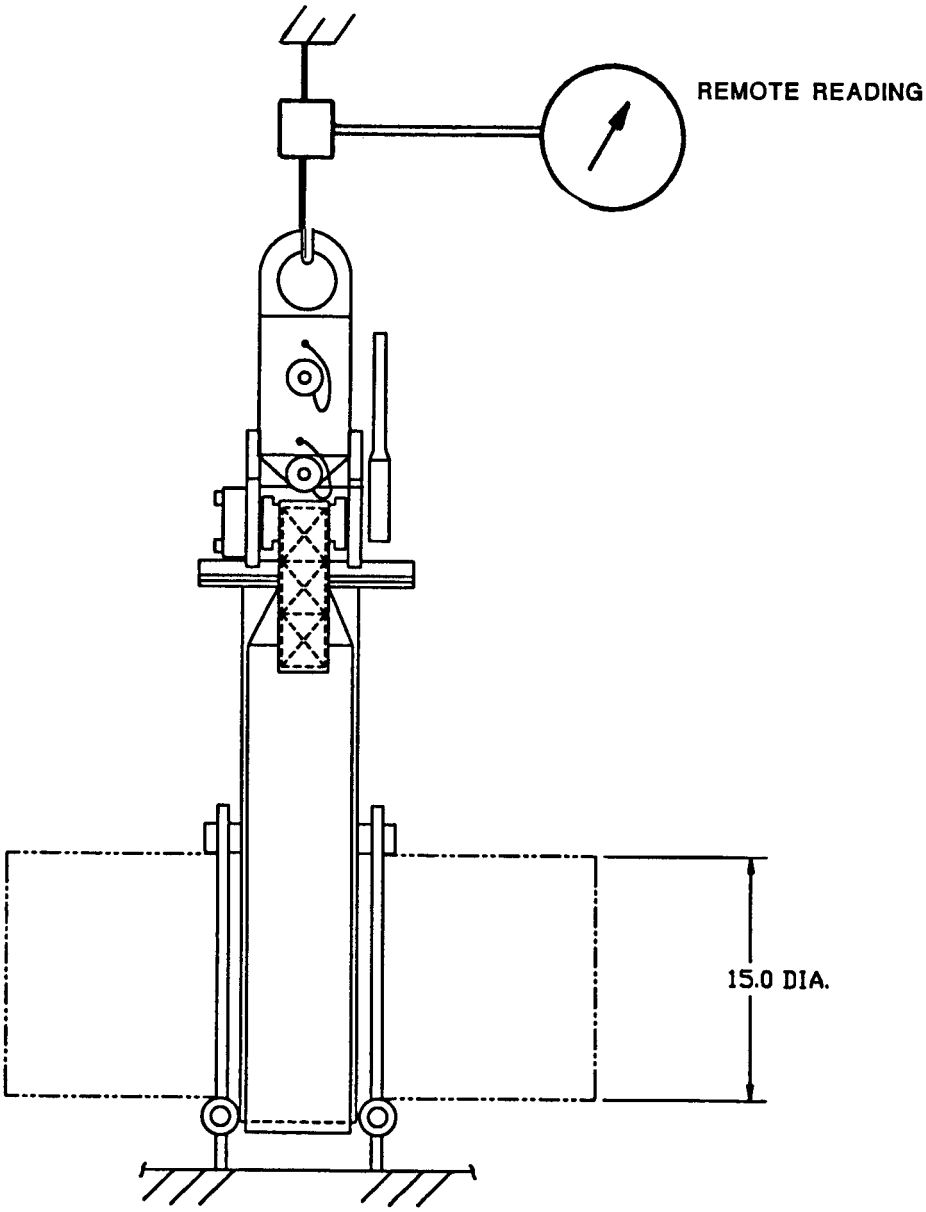

Test No. 2

FIGURE 4-62. Test Arrangement, Guided Weapon Carrier, Mk 52 Mod 1 (Sheet 2 of 2)

CARRIER, 16-INCH POWDER TANK, MK 54 MOD 1
DL 5167166
NSN 9Z 394-01-325-1704

SWL	TEST LOAD	TEST DURATION
430 POUNDS	860 POUNDS	2 MINUTES

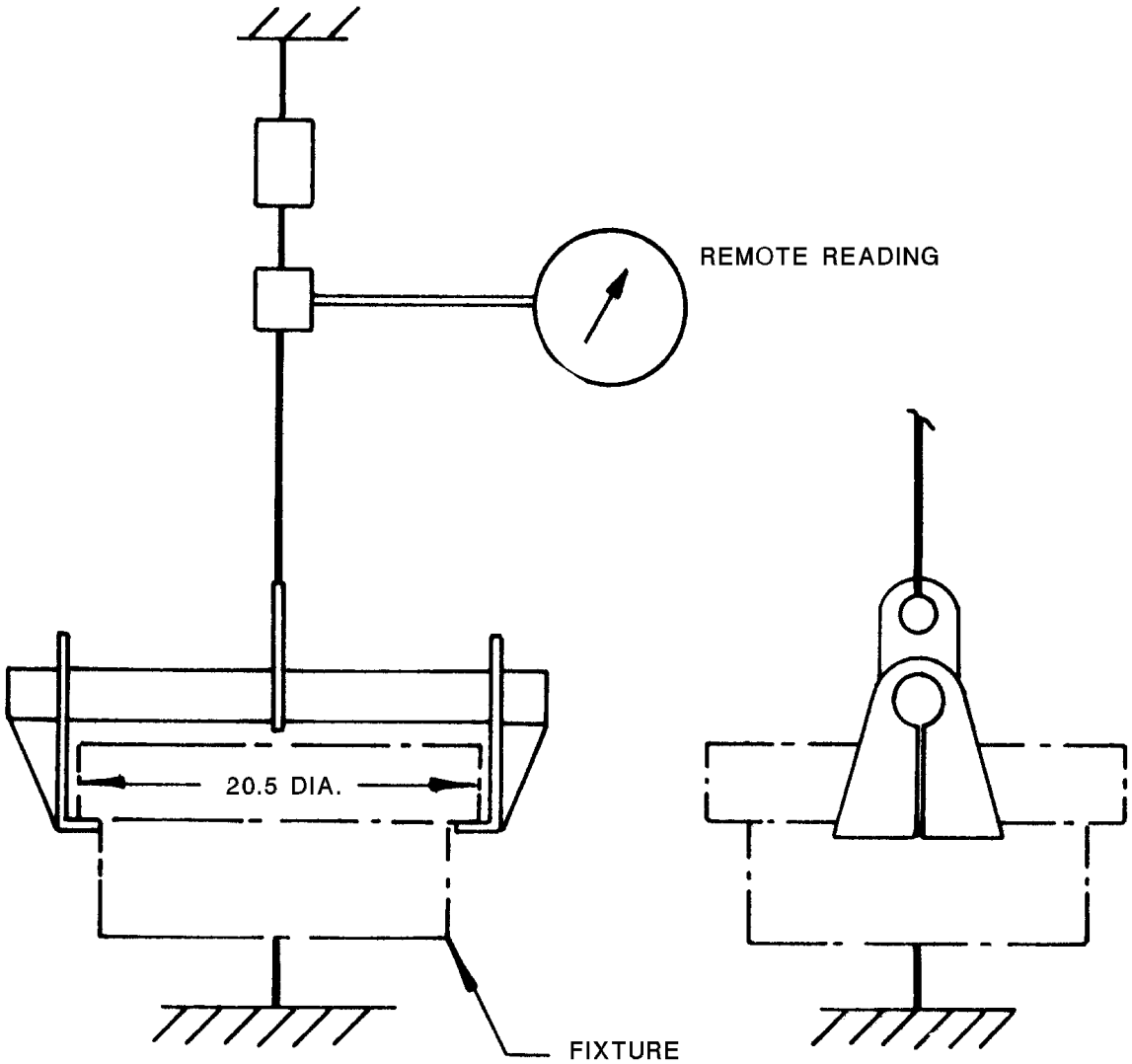

FIGURE 4-63. Test Arrangement, 16-Inch Powder Tank Carrier, Mk 54 Mod 1

CARRIER, WEAPON
MK 55 MOD 1
DL 5166315
NSN 1H 1450-01-068-6728

SWL	TEST LOAD	TEST DURATION
3,000 POUNDS	6,000 POUNDS	2 MINUTES

NOTE

Refer to chapter 3 for test fixture illustration and description.

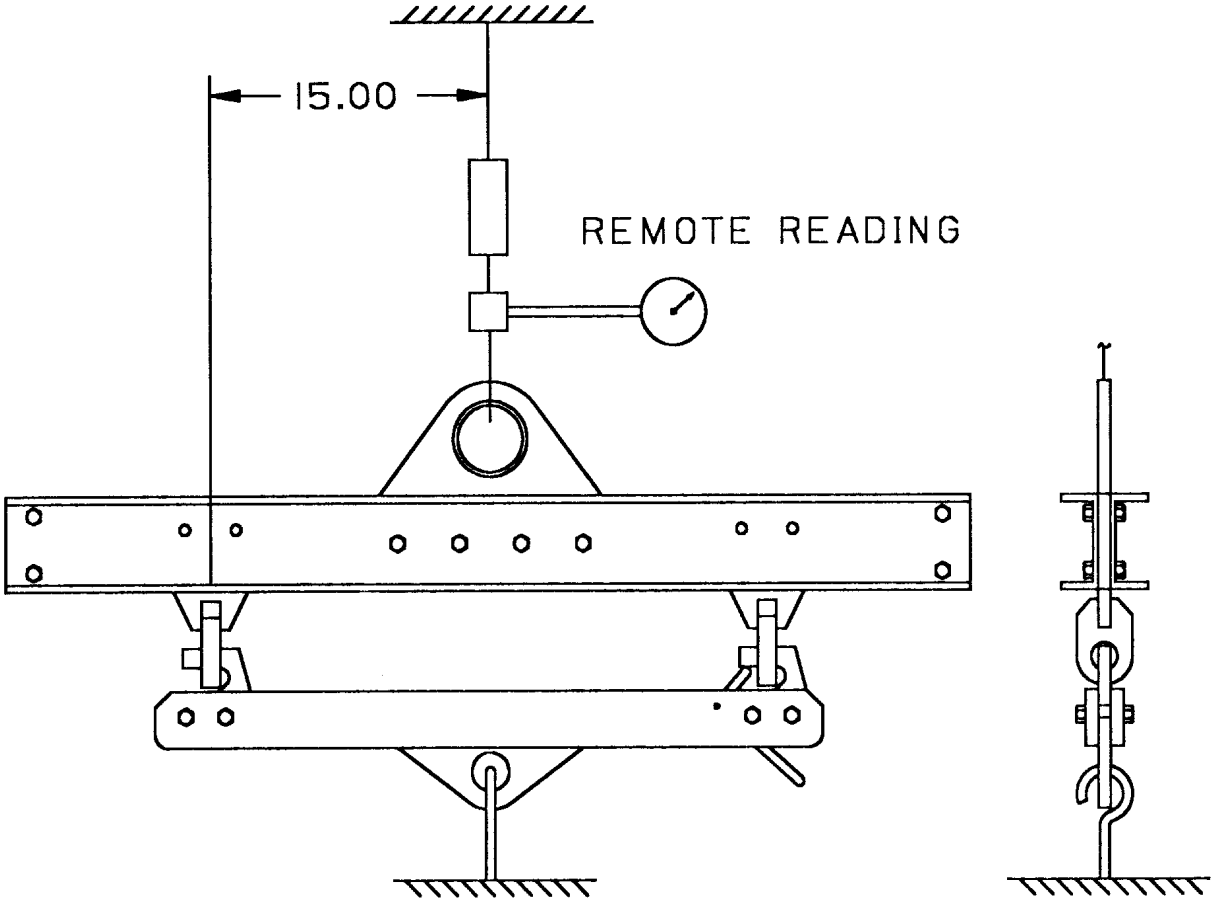

FIGURE 4-64. Test Arrangement, Weapon Carrier, Mk 55 Mod 1

CARRIER, SPIDER,
MK 60 MOD 0
DL 5167288
NSN 8T 1450-01-336-0856

SWL	TEST LOAD	TEST DURATION
200 POUNDS	400 POUNDS	2 MINUTES

NOTE

Refer to chapter 3 for test fixture illustration and description.

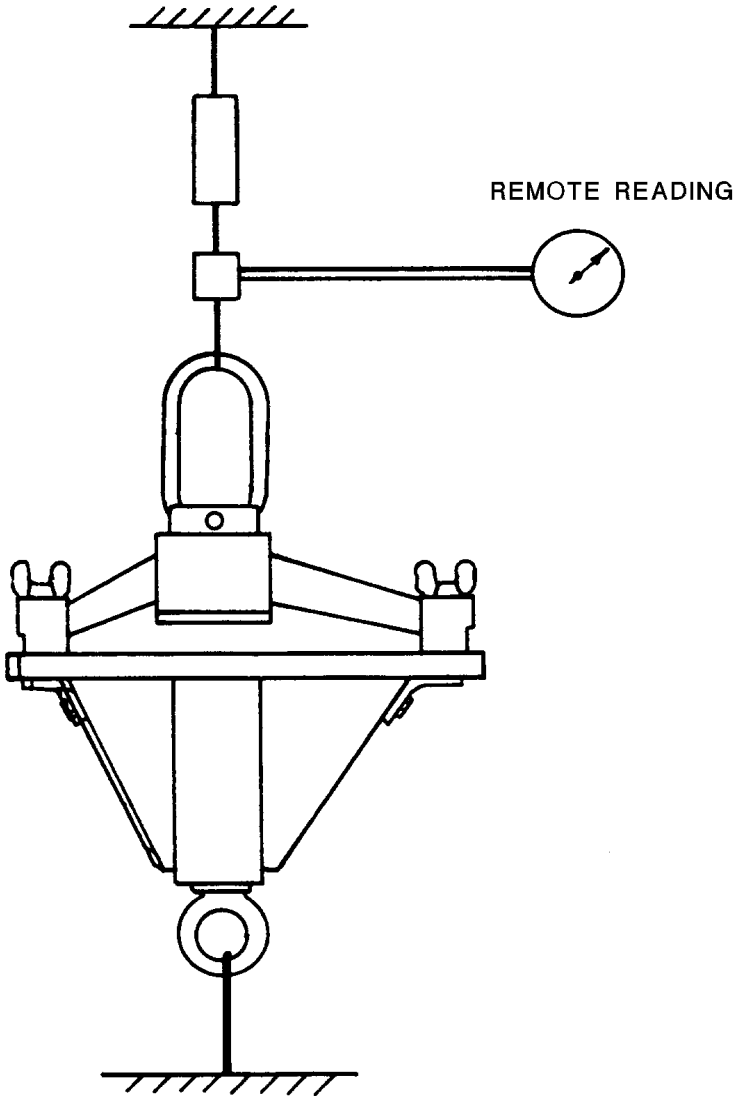

FIGURE 4-65. Test Arrangement, Spider Carrier, Mk 60 Mod 0

CARRIER, SPIDER,
MK 61 MOD 0
DL 5167440
NSN 8T 1450-01-336-0857

SWL	TEST LOAD	TEST DURATION
200 POUNDS	400 POUNDS	2 MINUTES

NOTE

Refer to chapter 3 for test fixture illustration and description.

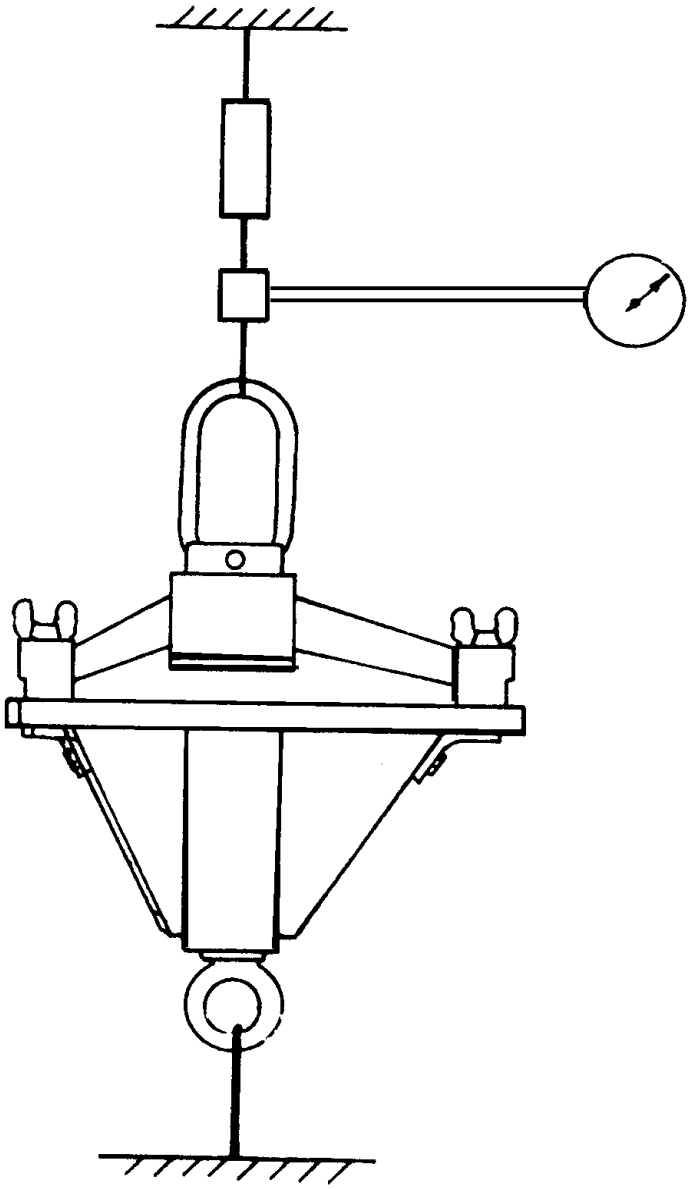

FIGURE 4-66. Test Arrangement, Spider Carrier, Mk 61 Mod 0

Section VI

DOLLIES

4-7. GENERAL

Dollies requiring testing are listed in table 4-6 with cross references to their drawing/DL/LD number; test arrangement figure numbers; maintenance index page (MIP) numbers/Intermediate and Depot Maintenance Instructions, OR-99/XXXXXXX; weight; rated SWL; applied test load and test duration of items used both ashore and aboard ship. Prior to testing, each dolly shall be visually inspected to locate obvious defects that would be cause for rejection, thus preventing the occurrence of a dangerous situation. Load bearing component parts (wire rope slings and connections to dolly, lifting eyes, forklift guides, shear mounts, etc.) that are damaged and accessory fittings and hardware that are damaged or do not comply with applicable drawings and specifications, or loose or missing parts shall be cause for rejection. Before, during and after testing dollies, the precautions included in paragraphs 2-5.1, 2-5.2, and 2-5.3 shall be observed.

Table 4-6. Quick Reference Data, Dollies

ITEM NOMENCLATURE	DRAWING OR DL/LD	FIGURE NO.	MIP NO. OR OR-99/	ITEM WEIGHT (LBS)	SAFE WORKING LOAD (LBS)	TEST LOAD (LBS)	TEST DURATION (MIN.)
Dolly, Missile Transfer, MK 6 Mod 4	DL 2643550	4-67 (1) 4-67 (2) 4-67 (3)	7221/R61	1,540	*3,080 #3,080 +1,540	6,160 6,160 3,080	2 2 2
Dolly, Missile Transfer, Mk 30 Mod 0	DL 5167323	4-68 (1) 4-68 (2) 4-68 (3)	7221/R64		*3,760 #3,760 +1,560	7,520 7,520 3,120	2 2 2

* Test No. 1

Test No. 2

+ Test No. 3

NOTE: Test frequency columns have been deleted in accordance with paragraph 4-1.

DOLLY, MISSILE TRANSFER,
MK 6 MOD 4
DL 26 43550
NSN 8T 1450-00-186-8541

SWL	TEST LOAD	TEST DURATION
3,080 POUNDS	6,160 POUNDS	2 MINUTES

NOTE

Refer to chapter 3 for test fixture illustration and description.

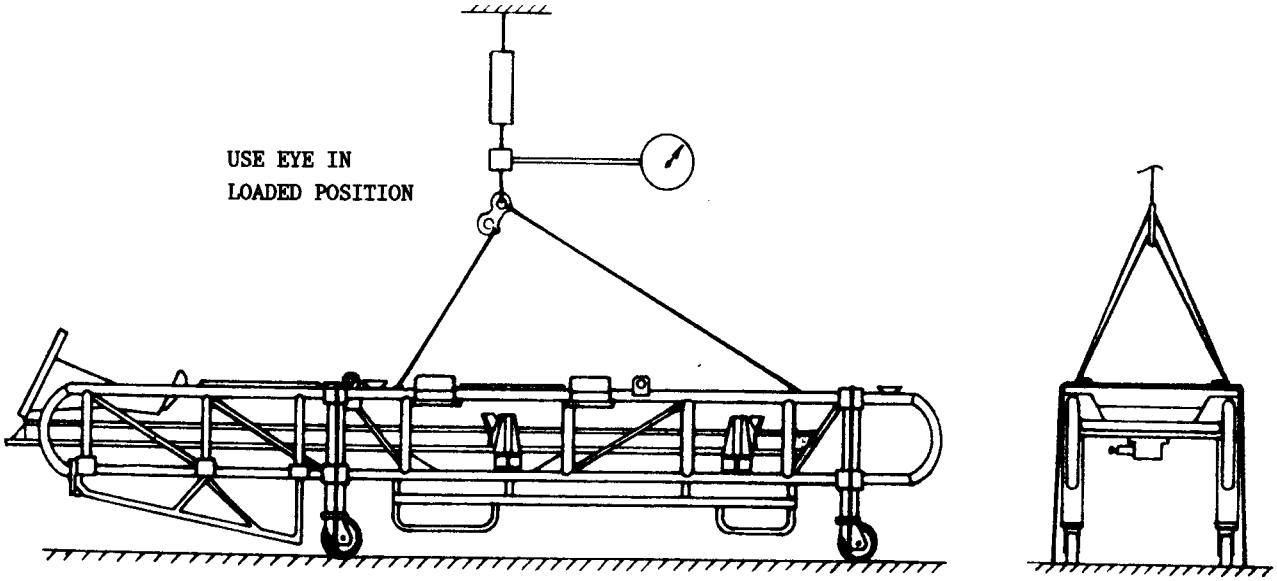

Test No. 1 - Dolly Sling Test

FIGURE 4-67. Test Arrangement, Missile Transfer Dolly, Mk 6 Mod 4 (Sheet 1 of 3)

DOLLY, MISSILE TRANSFER,
MK 6 MOD 4
DL 26 43550
NSN 8T 1450-00-186-8541

SWL	TEST LOAD	TEST DURATION
3,080 POUNDS	6,160 POUNDS	2 MINUTES

NOTE

Refer to chapter 3 for test fixture illustration and description.

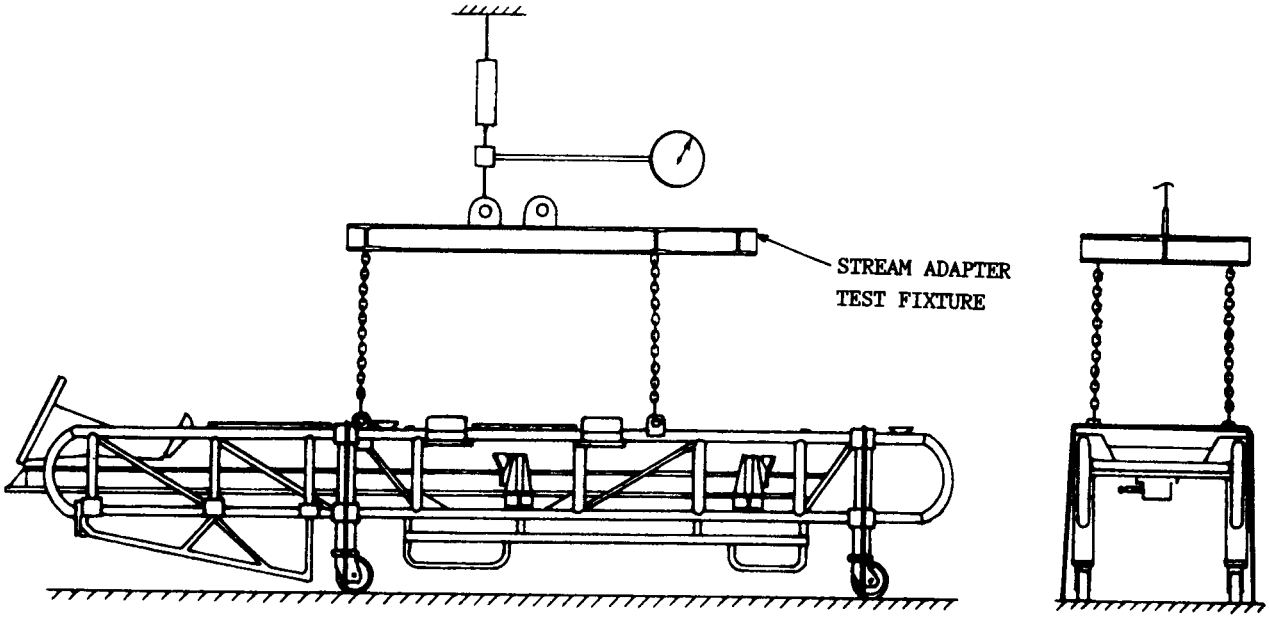

Test No. 2 - STREAM Strongback Test

FIGURE 4-67. Test Arrangement, Missile Transfer Dolly, Mk 6 Mod 4 (Sheet 2 of 3)

DOLLY, MISSILE TRANSFER,
MK 6 MOD 4
DL 26 43550
NSN 8T 1450-00-186-8541

SWL	TEST LOAD	TEST DURATION
1,540 POUNDS	3,080 POUNDS	2 MINUTES

NOTE

Refer to chapter 3 for test fixture illustration and description.

Tension weight does not include dolly weight of 1,540 pounds. If dynamometer cannot be zeroed out, add dolly weight to test weight.

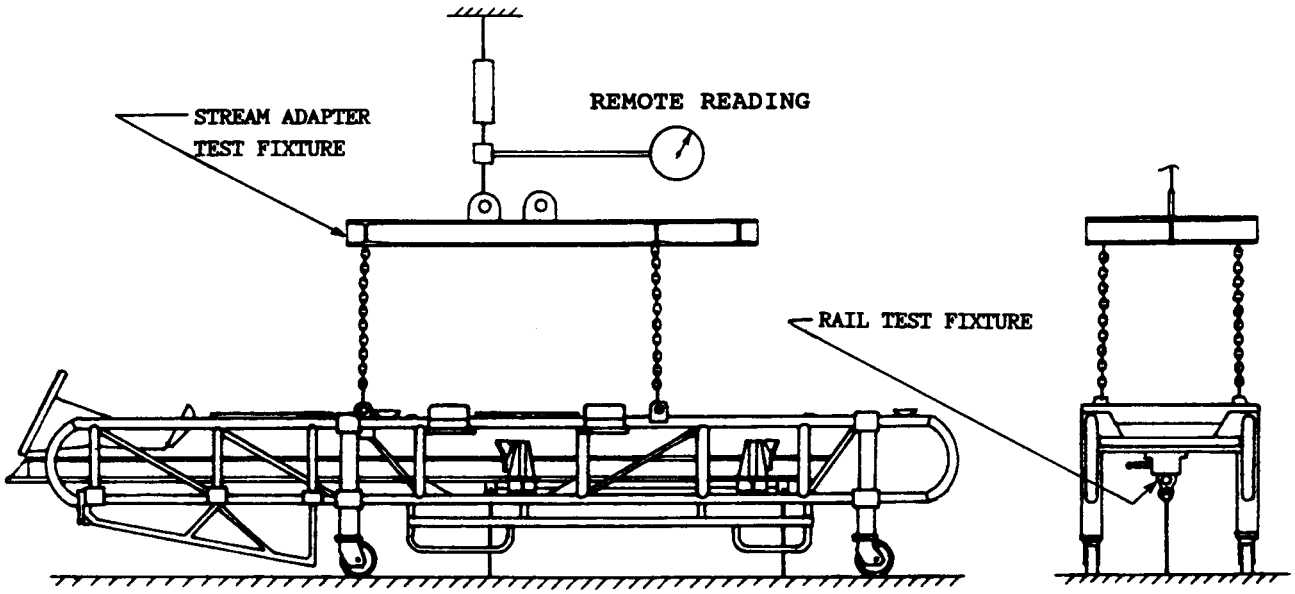

Test No. 3 - Missile Rail Test

FIGURE 4-67. Test Arrangement, Missile Transfer Dolly, Mk 6 Mod 4 (Sheet 3 of 3)

DOLLY, MISSILE TRANSFER,
MK 30 MOD 0
DL 5167323
NSN 8T 1450-01-251-5991

SWL	TEST LOAD	TEST DURATION
3,760 POUNDS	7,520 POUNDS	2 MINUTES

NOTE

Refer to chapter 3 for test fixture illustration and description.

Set eye in loaded position during test.

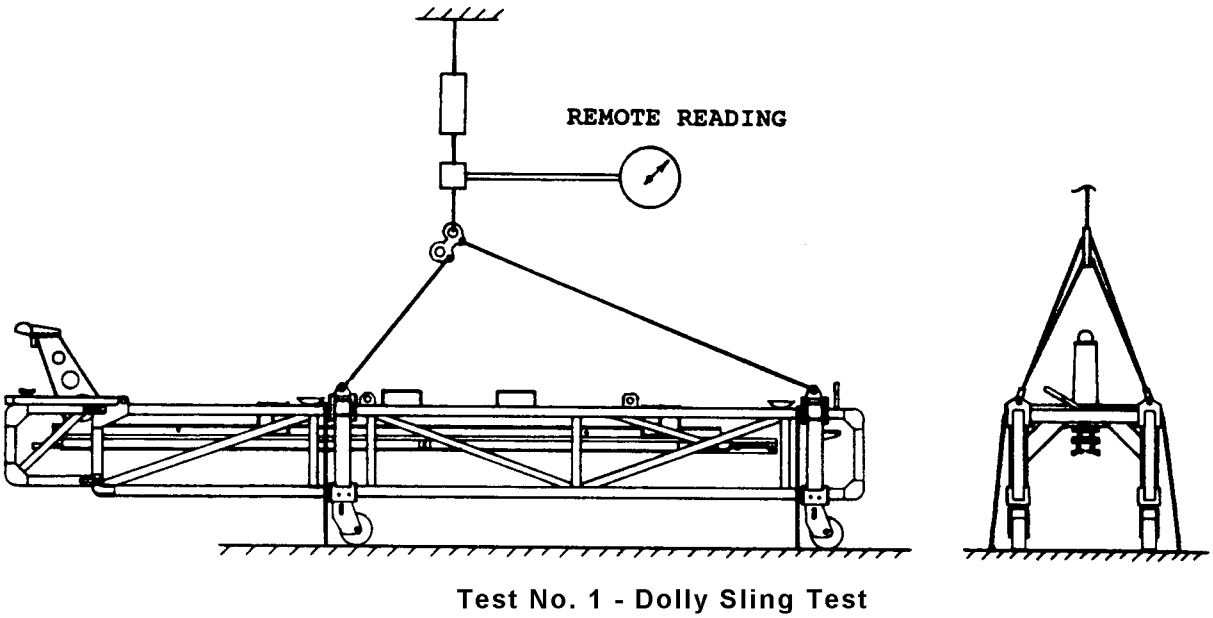

FIGURE 4-68. Test Arrangement, Missile Transfer Dolly, Mk 30 Mod 0 (Sheet 1 of 3)

DOLLY, MISSILE TRANSFER,
MK 30 MOD 0
DL 5167323
NSN 8T 1450-01-251-5991

SWL	TEST LOAD	TEST DURATION
3,760 POUNDS	7,520 POUNDS	2 MINUTES

NOTE

Refer to chapter 3 for test fixture illustration and description.

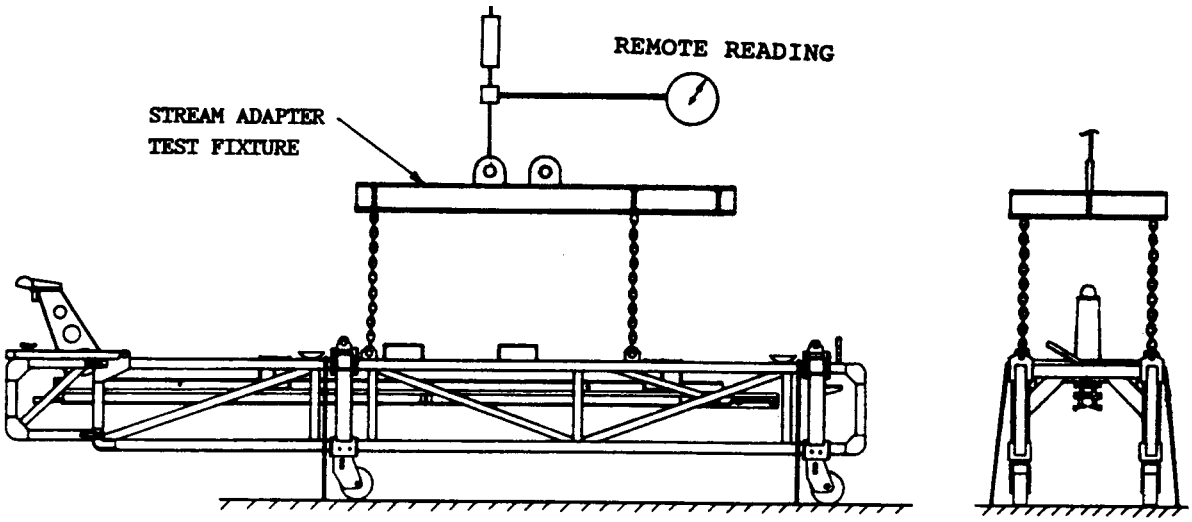

Test No. 2 - STREAM Strongback Test

FIGURE 4-68. Test Arrangement, Missile Transfer Dolly, Mk 30 Mod 0 (Sheet 2 of 3)

DOLLY, MISSILE TRANSFER,
MK 30 MOD 0
DL 5167323
NSN 8T 1450-01-251-5991

SWL	TEST LOAD	TEST DURATION
1,560 POUNDS	3,120 POUNDS	2 MINUTES

NOTE

Refer to chapter 3 for test fixture illustration and description. Tension weight does not include dolly weight of 2,200 pounds. If dynamometer cannot be zeroed out, add dolly weight to test weight.

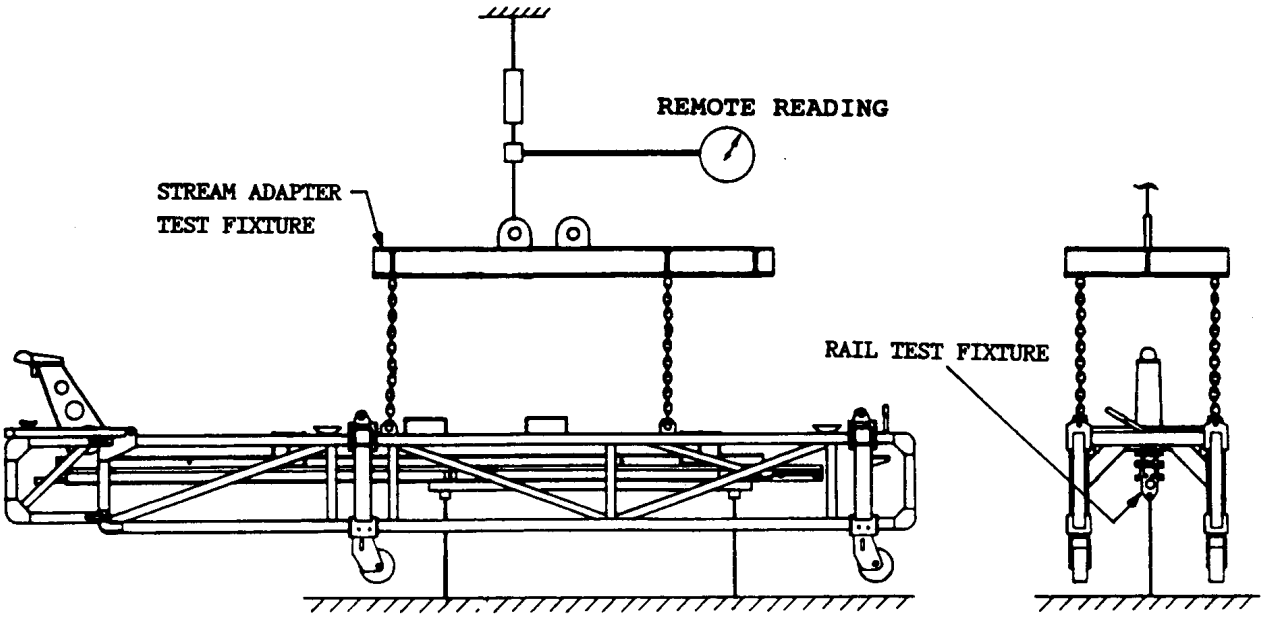

Test No. 3 - Missile Rail Test

FIGURE 4-68. Test Arrangement, Missile Transfer Dolly, Mk 30 Mod 0 (Sheet 3 of 3)

Section VII

FIXTURES

4-8. GENERAL

Fixtures requiring testing are listed in table 4-7 with cross reference to their drawing/DL/LD numbers; test arrangement figure number; maintenance index page (MIP) number/Intermediate and Depot Maintenance Instructions, OR-99/XXXXXXX; weight; rated SWL; applied test load and test duration items used both ashore and aboard ship. Prior to testing, each fixture shall be visually inspected to locate obvious defects that would be cause for rejection, thus preventing the occurrence of a dangerous situation resulting from failure during testing. Accessory fittings and hardware that do not comply with applicable drawings or specifications or loose or missing parts shall be cause for rejection. Before, during, and after testing fixtures, the precautions included in paragraphs 2-5.1, 2-5.2, and 2-5.3 shall be observed.

Table 4-7. Quick Reference Data, Fixtures

ITEM NOMENCLATURE	DRAWING OR DL/LD	FIGURE NO.	MIP NO. OR OR-99/	ITEM WEIGHT (LBS)	SAFE WORKING LOAD (LBS)	TEST LOAD (LBS)	TEST DURATION (MIN.)
Fixture, BSS Vacuum/Lifting	Dwg 6277140	4-69			275	550	2
Fixture, Boiler Lifting	Dwg 6276412	4-70			150	300	2
Fixture, Oxidant, Tank/Condenser Lifting	Dwg 6276425	4-71			500	1,000	2
Fixture, Warhead Insertion, Mk 15 Mod 1	DL 2643057	4-72	86XP000	180	200	400	2
Fixture, Warhead Insertion, Mk 22 Mod 0	DL 5166805	4-73	86D8000	175	200	400	2
Fixture, Tilt, Mk 25 Mod 0	Dwg No 5497781-9	4-74	86BL000 7221/R66	891	4,100	Note 1	2
Fixture, Handling, Lower Airframe, Mk 27 Mod 0	PL 6204874	4-75	85E2000 /3000	10	50	100	2
Fixture, Handling, Upper Airframe, Mk 28 Mod 0	PL 6204871	4-76	85E2000 /3000	10	50	100	2
Fixture, Handling-TVC, Mk 29 Mod 0	PL 6204864	4-77 (1) 4-77 (2)	85E4000	11	*60 #60	120 120	2 2

* Test No. 1

\# Test No. 2

NOTE: Test frequency columns have been deleted in accordance with paragraph 4-1.

FIXTURE, BSS VACUUM/LIFTING
NAVSEA DRAWING 6277140
NSN NOT ASSIGNED

SWL	TEST LOAD	TEST DURATION
275 POUNDS	550 POUNDS	2 MINUTES

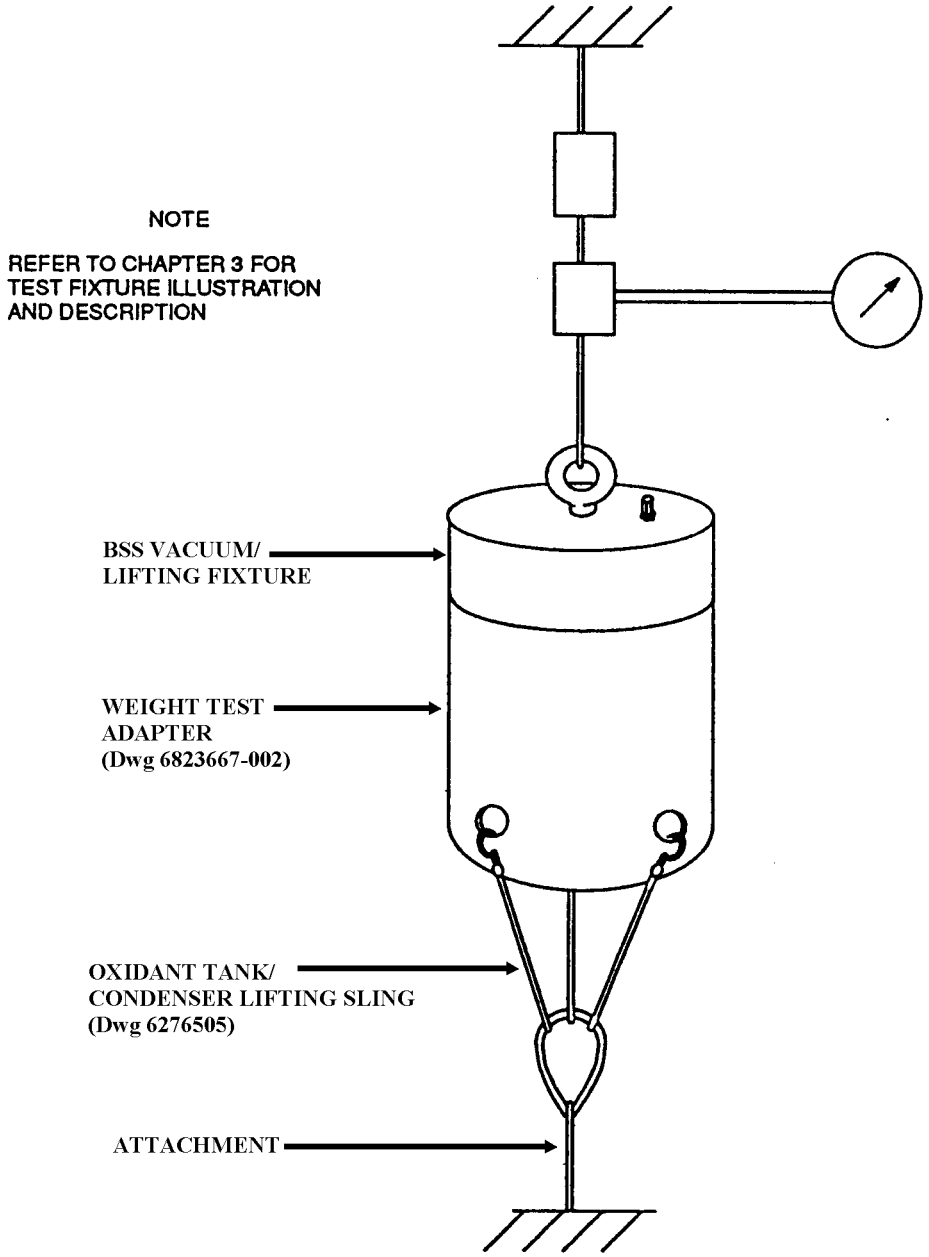

FIGURE 4-69. Test Arrangement, BSS Vacuum/Lifting Fixture

FIXTURE, BOILER LIFTING
NAVSEA DRAWING 6276412
NSN - NOT ASSIGNED

SWL	TEST LOAD	TEST DURATION
150 POUNDS	300 POUNDS	2 MINUTES

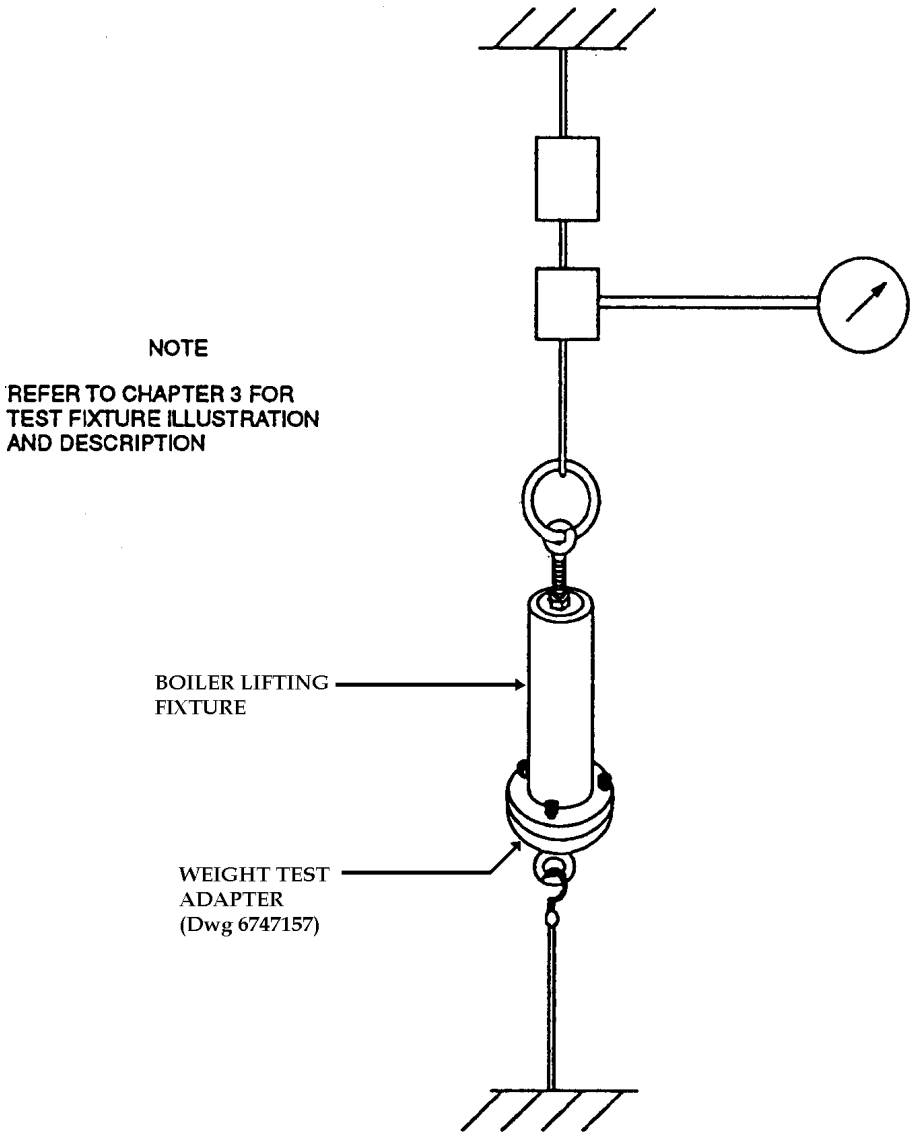

FIGURE 4-70. Test Arrangement, Boiler Lifting Fixture

FIXTURE, OXIDANT TANK/CONDENSER LIFTING
NAVSEA DRAWING 6276425
NSN - NOT ASSIGNED

SWL	TEST LOAD	TEST DURATION
500 POUNDS	1,000 POUNDS	2 MINUTES

NOTE

Refer to chapter 3 for test fixture illustration and description

This test is also used to test the oxidant tank/condenser lifting sling (6276505)

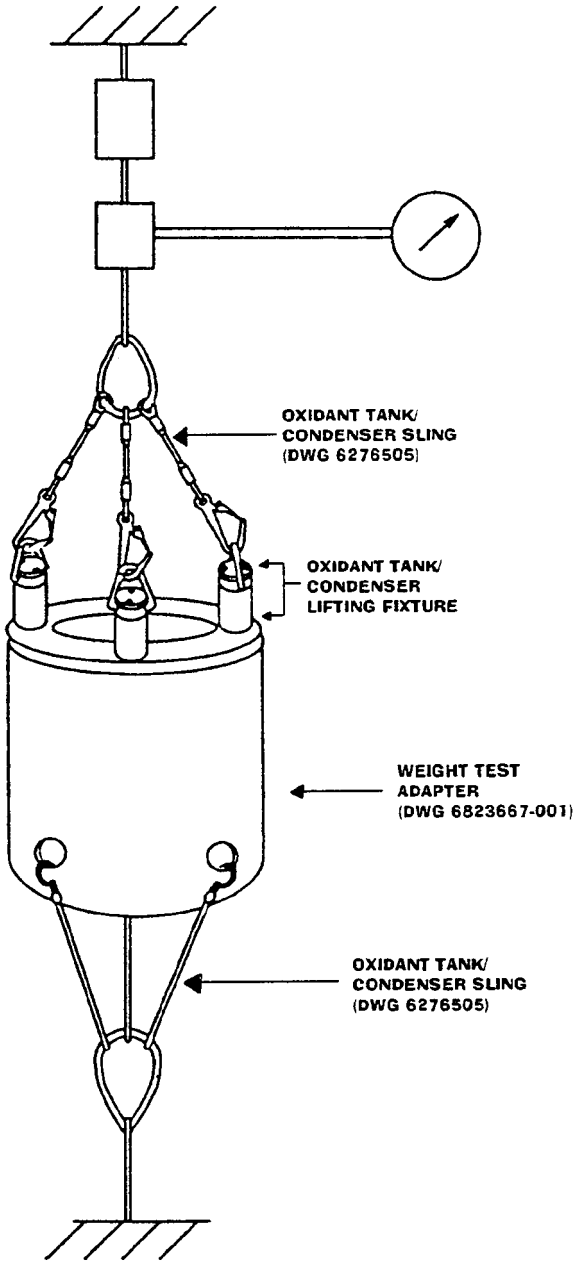

*Some details of sling configuration omitted

FIGURE 4-71. Test Arrangement, Oxidant Tank/Condenser Lifting Fixture

FIXTURE, WARHEAD INSERTION,
MK 15 MOD 1
DL 2643057
NSN 8T 1450-01-018-2633

SWL	TEST LOAD	TEST DURATION
200 POUNDS	400 POUNDS	2 MINUTES

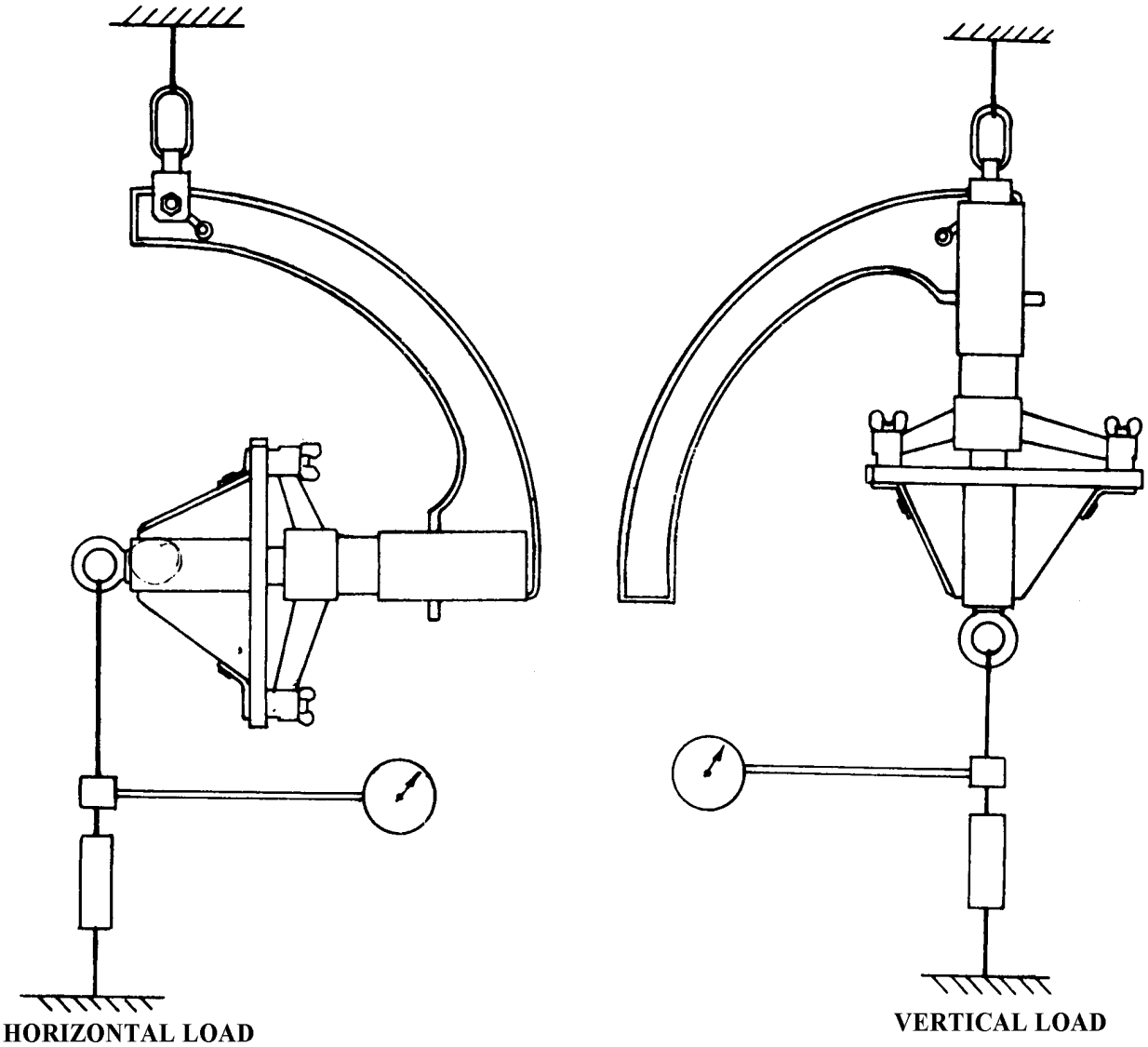

FIGURE 4-72. Test Arrangement, Warhead Insertion Fixture, MK 15 Mod 1

FIXTURE, WARHEAD INSERTION,
MK 22 MOD 0
DL 5166805
NSN 8T 1450-01-193-6370

SWL	TEST LOAD	TEST DURATION
200 POUNDS	400 POUNDS	2 MINUTES

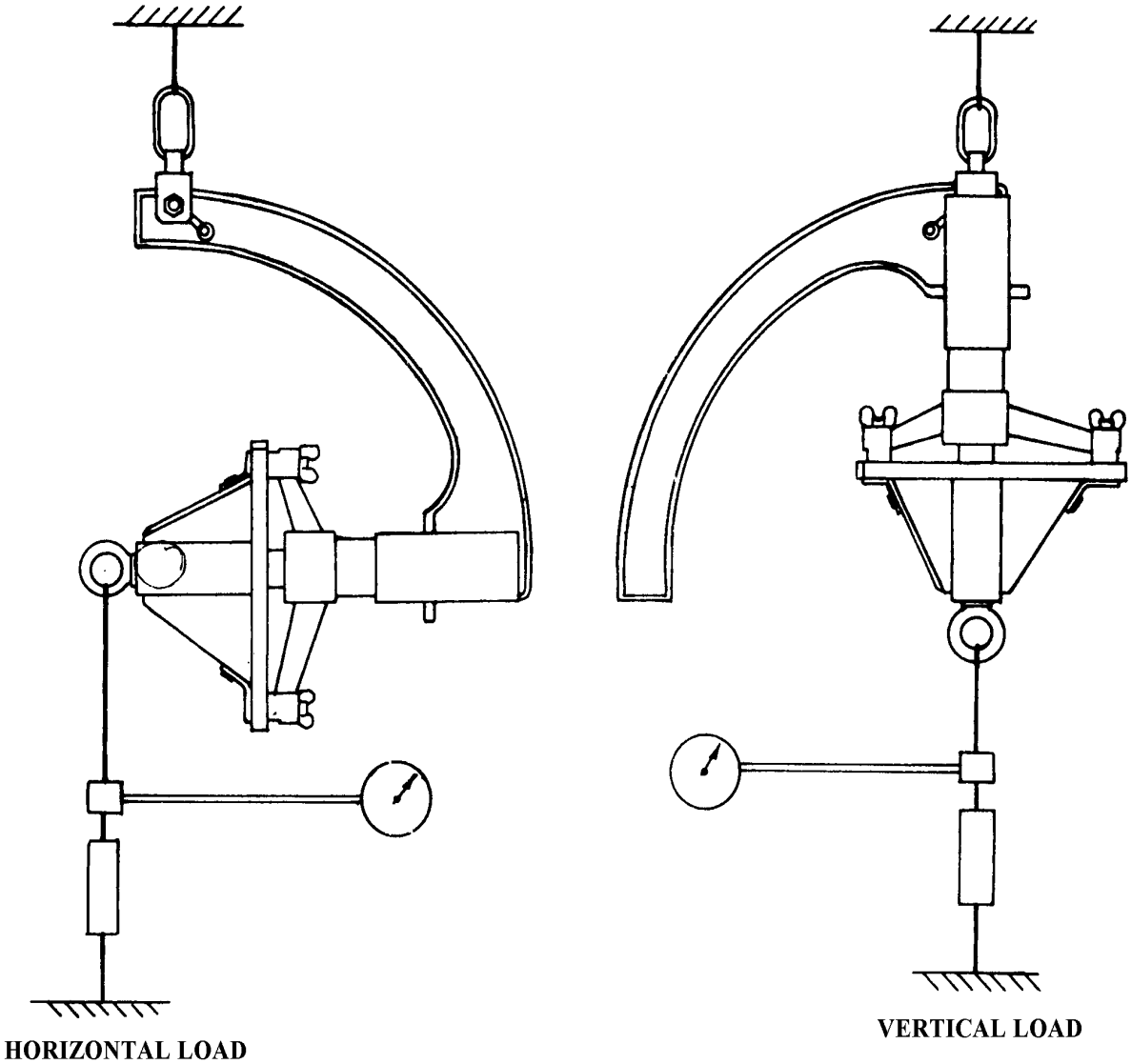

FIGURE 4-73. Test Arrangement, Warhead Insertion Fixture, Mk 22 Mod 0

FIXTURE, TILT,
MK 25 MOD 0
DWG NO. 5497781-9
NSN 8T 1450-01-262-1144

NOTE

Refer to chapter 3 for test fixture illustration and description.

The Mk 25 Mod 0 Tilt Fixture consists of four individual subassemblies that are tested independently of one onother, but are assigned the same safe working load because they are only used as a complete assembly. The four subassemblies are to be tested as indicated below:

	SWL	TEST LOAD	TEST DURATION
Pivot Fixture	4,100 lbs	Note 1	2 Minutes
Steady Rest	4,100 lbs	Note 1	2 Minutes
Steady Rest Beam Weldment	4,100 lbs	Note 1	2 Minutes
Receiver Locator Beam Weldment	4,100 lbs	Note 1	2 Minutes

NOTE 1

Individual pieces are to be tested and marked in accordance with NAVSEA SW394-AJ-MMI-010, Mk 25 Mod 0 Shipboard VLS Tilt Fixture Test Fixtures, Description, Operation, and Maintenance (DOM) Manual and Illustrated Parts Breakdown.

NOTE 2

Special test fixtures and procedures are required and are in place at SIMA San Diego, SIMA Norfolk, SIMA Mayport, NSRF Yokosuka, and IMF Pearl harbor.

FIGURE 4-74. Test Arrangement, Tilt Fixture, Mk 25 Mod 0

FIXTURE, HANDLING, LOWER AIRFRAME
MK 27 MOD 0
DL 6204874
NSN TO BE ASSIGNED

SWL	TEST LOAD	TEST DURATION
50 POUNDS	100 POUNDS	2 MINUTES

NOTE

Refer to chapter 3 for test fixture illustration and description.

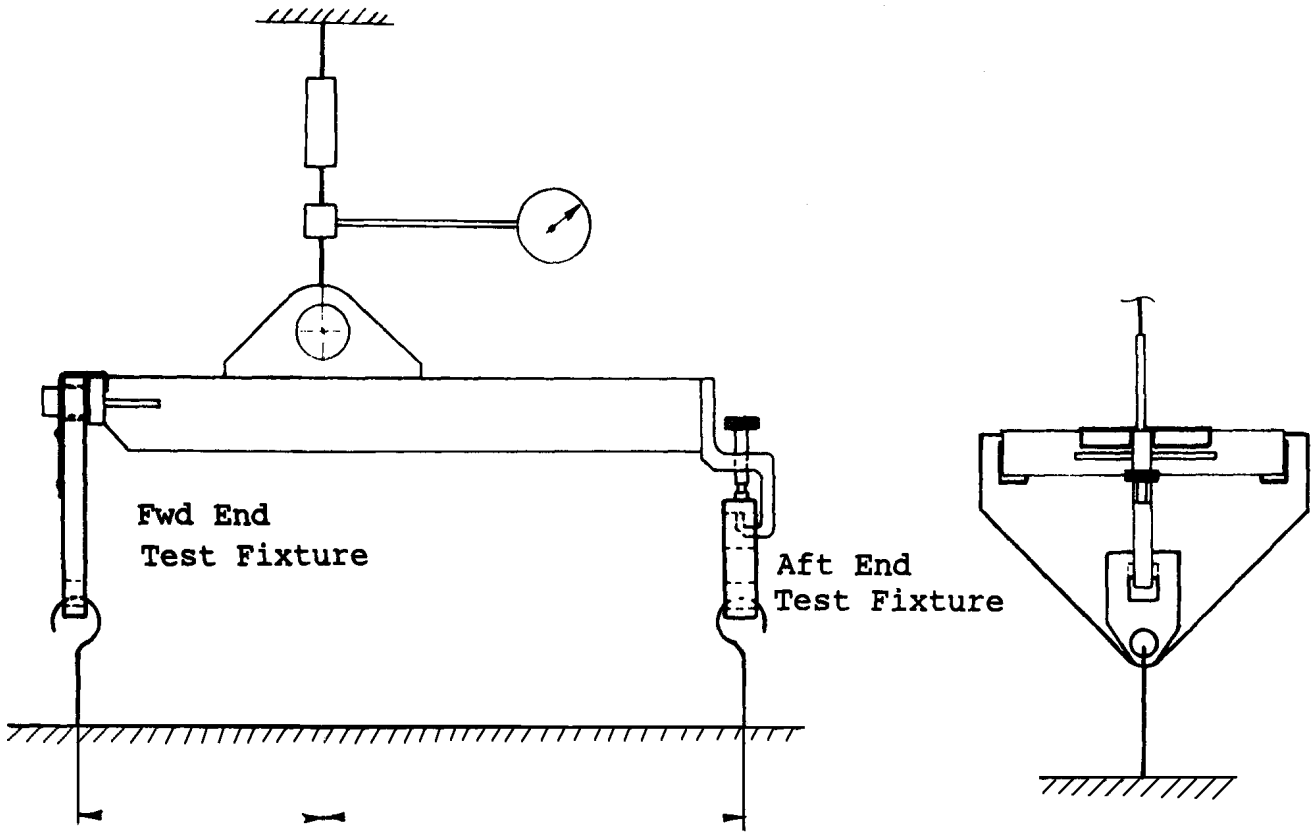

FIGURE 4-75. Test Arrangement, Lower Airframe Handling Fixture, Mk 27 Mod 0

FIXTURE, HANDLING, UPPER AIRFRAME
MK 28 MOD 0
DL 6204871
NSN TO BE ASSIGNED

SWL	TEST LOAD	TEST DURATION
50 POUNDS	100 POUNDS	2 MINUTES

NOTE

Refer to chapter 3 for test fixture illustration and description.

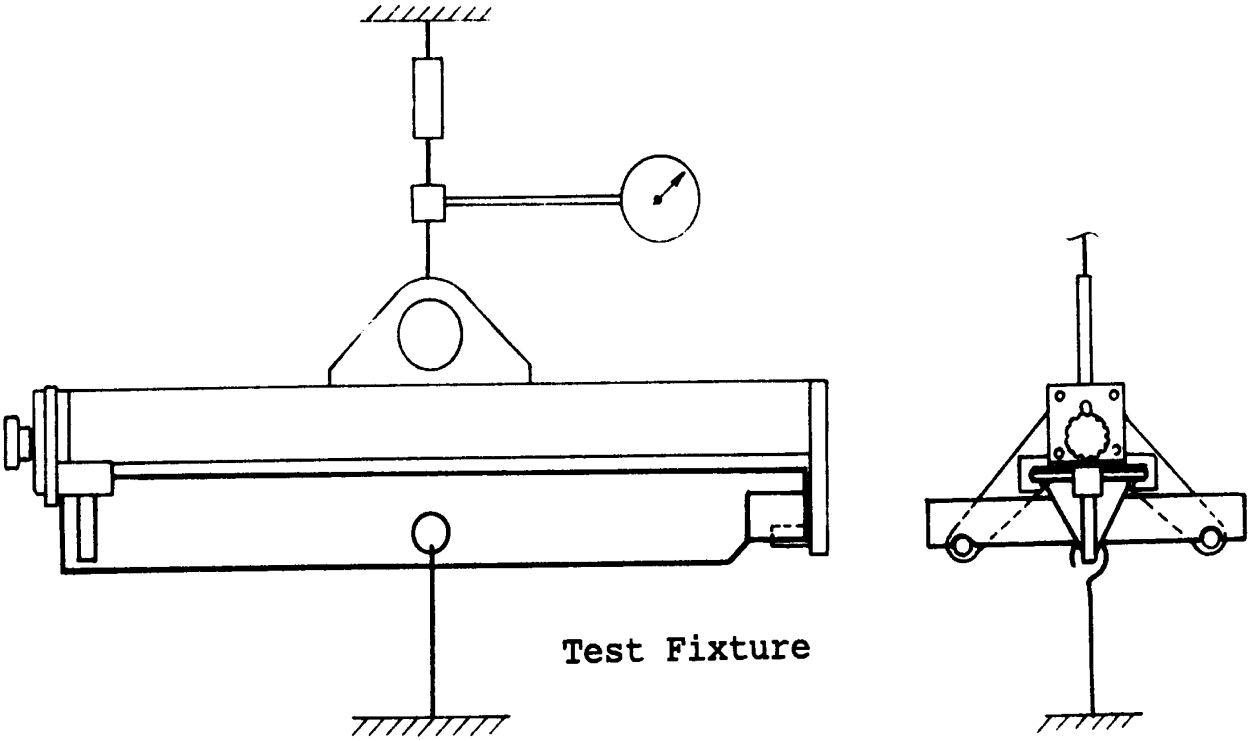

FIGURE 4-76. Test Arrangement, Upper Airframe Handling Fixture, Mk 28 Mod 0

FIXTURE, HANDLING-TVC
MK 29 MOD 0
PL 6204864
NSN TO BE ASSIGNED

SWL	TEST LOAD	TEST DURATION
60 POUNDS	120 POUNDS	2 MINUTES

NOTE

Refer to chapter 3 for test fixture illustration and description.

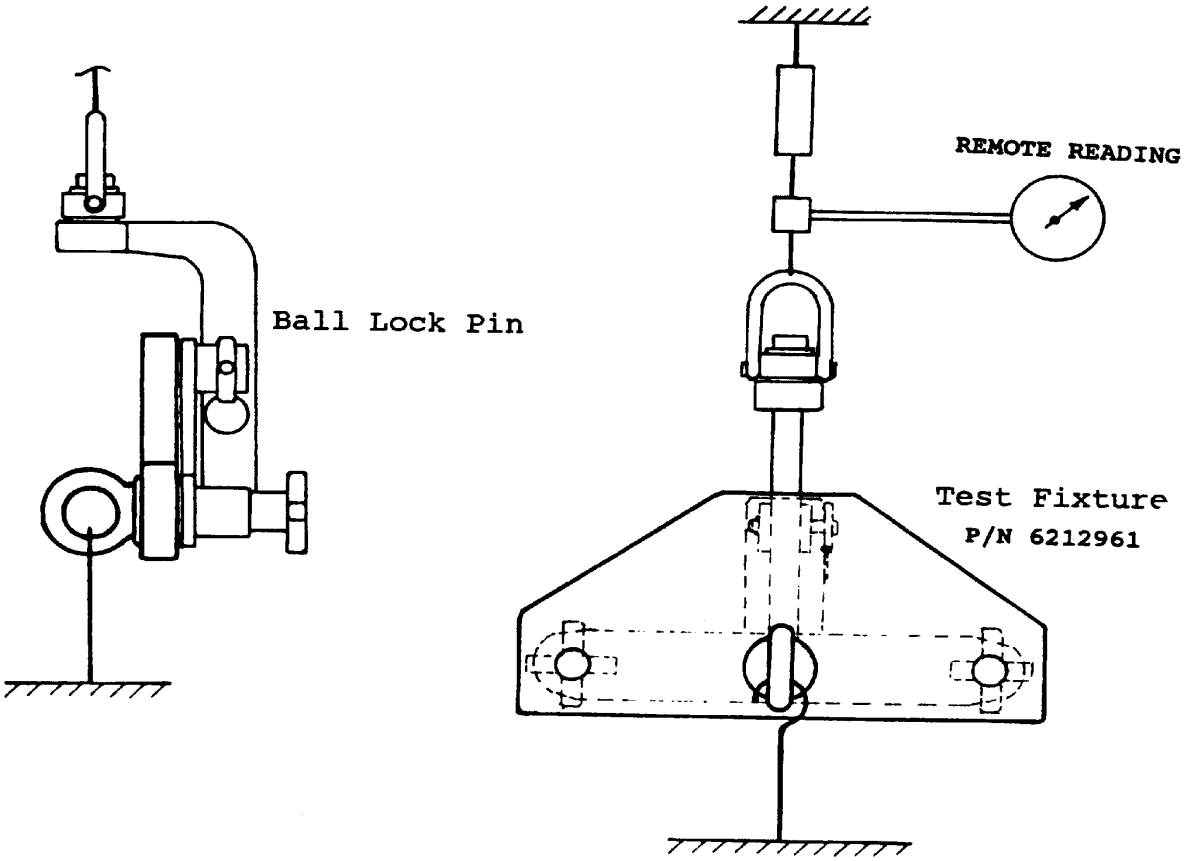

Test No. 1

NOTE

Perform tests No. 1 and 2 for Fixture, Handling-TVC, Mk 29 Mod 0

FIGURE 4-77. Test Arrangement, TVC Handling Fixture, Mk 29 Mod 0 (Sheet 1 of 2)

FIXTURE, HANDLING-TVC
MK 29 MOD 0
PL 6204864
NSN TO BE ASSIGNED

SWL	TEST LOAD	TEST DURATION
60 POUNDS	120 POUNDS	2 MINUTES

NOTE

Refer to chapter 3 for test fixture illustration and description.

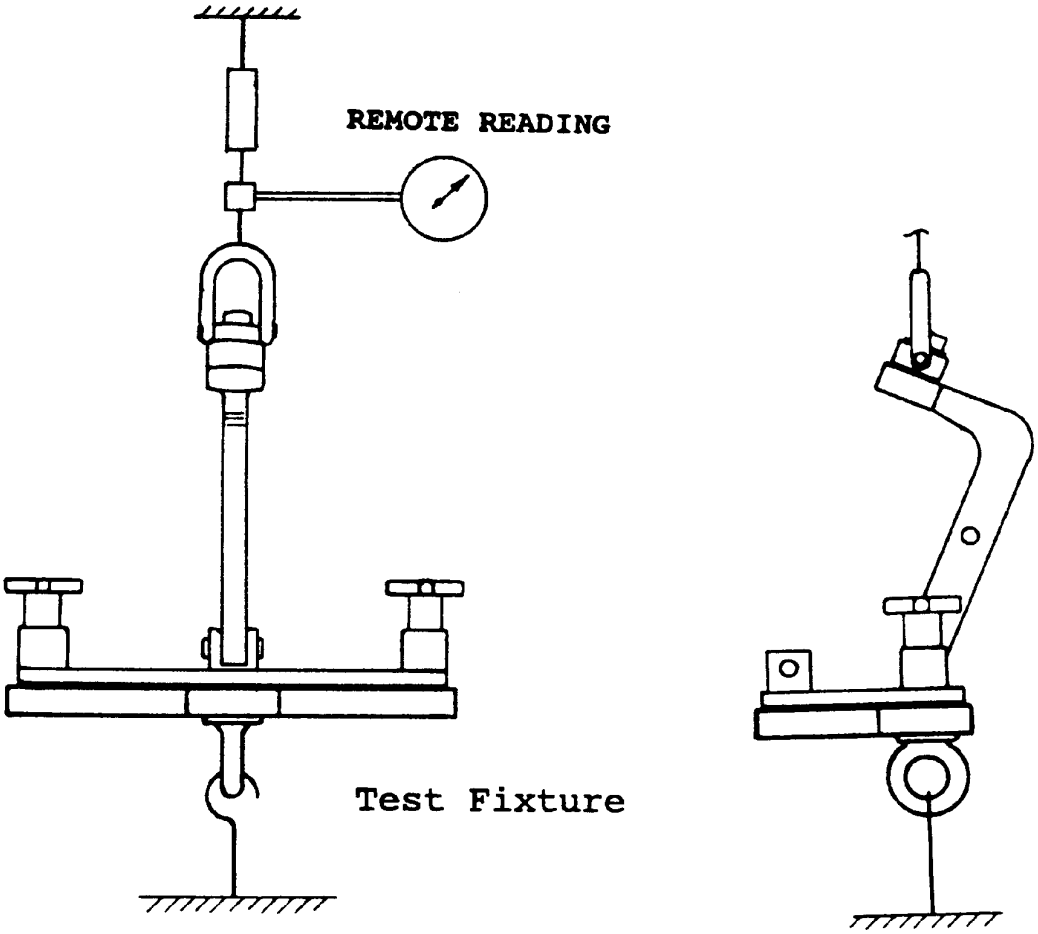

Test No. 2

NOTE

Perform tests No. 1 and 2 for Fixture, Handling-TVC, Mk 29 Mod 0

FIGURE 4-77. Test Arrangement, TVC Handling Fixture, Mk 29 Mod 0 (Sheet 2 of 2)

Section VIII

GANTRIES

4-9. GENERAL

Gantries requiring testing are listed in table 4-8 with cross references to their drawing/ DL/LD number; test arrangement figure number; maintenance index page (MIP) number/ Inmediate and Depot Maintenance Instructions, OR-99/XXXXXXX; weight; rated SWL; applied test load and test duration of items used both ashore and aboard ship. Prior to testing, each gantry shall be visually inspected to locate obvious defects that would be cause for rejection, thus preventing the occurrence of a dangerous situation. Accessory fittings and hardware (safety hooks, chain links, wire rope or cables, quick-release pins, etc.) that are damaged or do not comply with applicable drawings and specifications, or loose or missing parts shall be cause for rejection. Before, during, and after testing gantries, the precautions included in paragraphs 2-5.1, 2-5.2, and 2-5.3 shall be observed.

Table 4-8. Quick Reference Data, Gantries

ITEM NOMENCLATURE	DRAWING OR DL/LD	FIGURE NO.	MIP NO. OR OR-99/	ITEM WEIGHT (LBS)	SAFE WORKING LOAD (LBS)	TEST LOAD (LBS)	TEST DURATION (MIN.)
Gantry, AUR Loading, Mk 28 Mod 0	DL 5167249	4-78 (1) 4-78 (2)			*4,500 #4,500	5,400 6,250	2 12 ±3 fpm

* Test Nos. 1, 2 and 3

Test No. 4

NOTE: Test frequency columns have been deleted in accordance with paragraph 4-1.

GANTRY, AUR LOADING
MK 28 MOD 0
DL 5167249
NSN TO BE ASSIGNED

TEST NO.	SWL	TEST LOAD	TEST DURATION
1	4,500 POUNDS	5,400 POUNDS	2 MINUTES
2	4,500 POUNDS	5,400 POUNDS	2 MINUTES
3	4,500 POUNDS	5,400 POUNDS	2 MINUTES

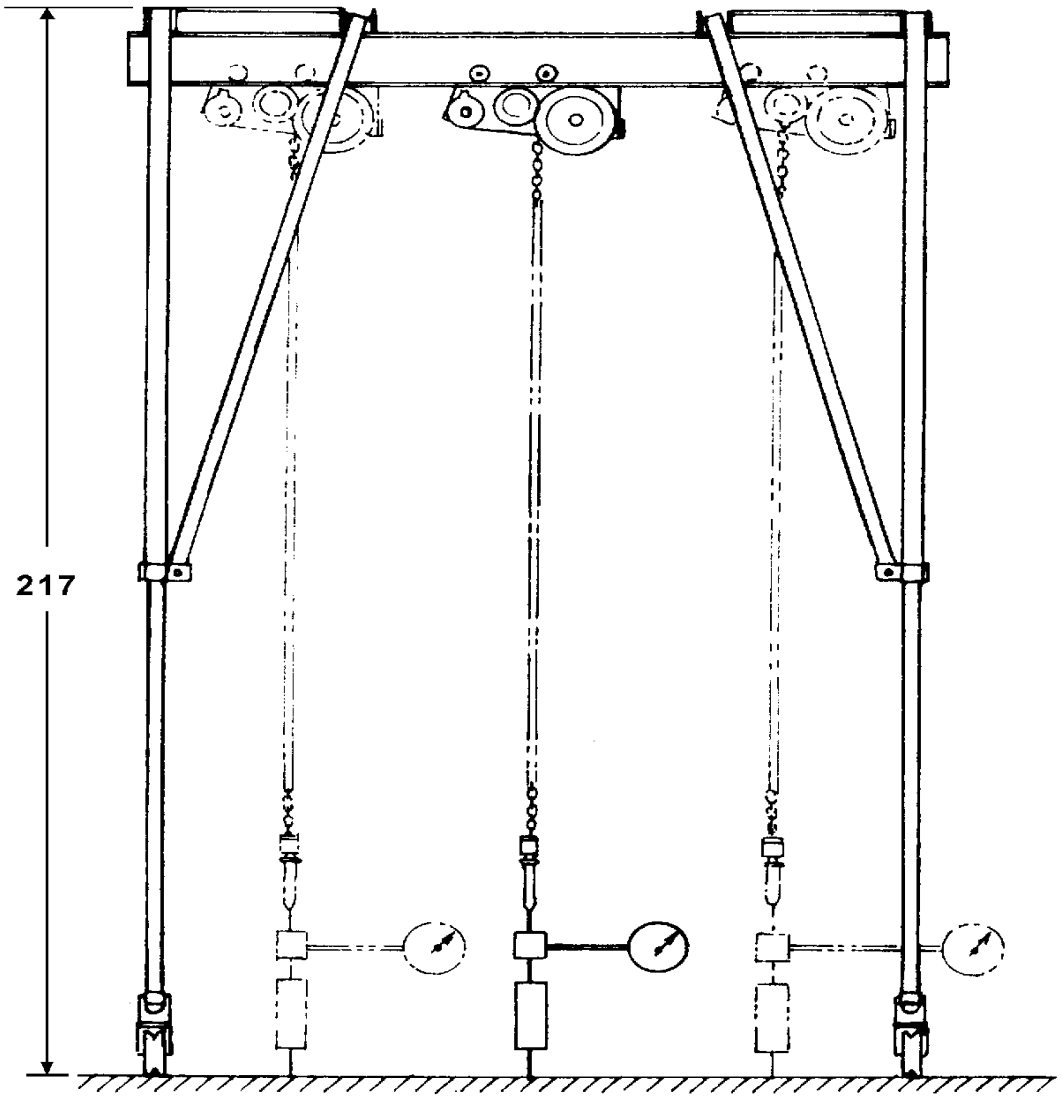

Test No 1, 2 and 3

FIGURE 4-78. Test Arrangement, AUR Loading Gantry, Mk 28 Mod 0 (Sheet 1 of 2)

GANTRY, AUR LOADING
MK 28 MOD 0
DL 5167249
NSN TO BE ASSIGNED

TEST NO.	SWL	TEST LOAD	TEST DURATION
4	4,500 POUNDS	6,250 POUNDS	12 ± 3 FPM

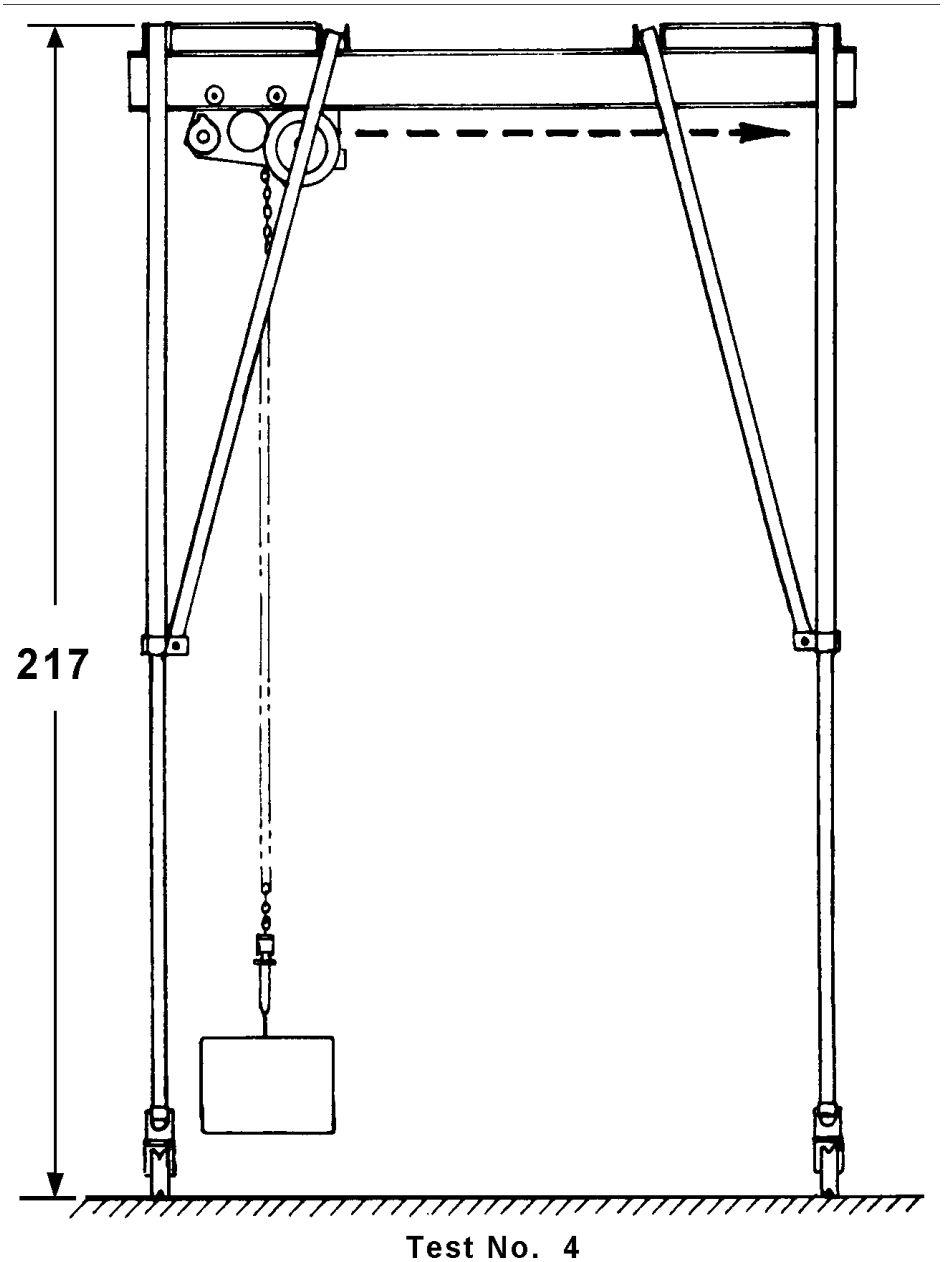

FIGURE 4-78. Test Arrangement, AUR Loading Gantry, Mk 28 Mod 0 (Sheet 2 of 2)

Section IX

SLINGS

4-10. GENERAL

Slings requiring testing are listed in table 4-9 with cross reference to their drawing/DL/LD numbers; test arrangement figure numbers; maintenance index page (MIP) number/ Intermediate and Depot Maintenance Instructions, OR-99/XXXXXXX; weight; rated SWL; applied test load and test duration of items used both ashore and aboard ship. Prior to testing, each sling shall be visually inspected per applicable MRC to locate obvious defects that would be cause for rejection, thus preventing the occurence of a dangerous situation. Some defects which are cause for rejection include damaged shackles, safety hooks, pins, thimbles, cable clips, swaged fittings, cables and wire-rope legs with broken and abraded strands, kinks, and sharp bends. Cable slings with one severed strand shall be rejected. Wire rope with corrosion or pitting, kinks, crushing, birdcaging, or any other physical damage which has resulted in distortion of the wire rope structure, six or more broken wires in one rope lay length or three or more broken wires in one strand lay length, or one or more broken wires within one rope lay length of any end fitting shall be rejected. Chain links that indicate more than 5 percent stretch in any five-link section, or any wear more than 10 percent of the original link, or having any broken welds shall be rejected. Chain links should not bend on each other and should be free with respect to one another. Before, during, and after testing slings, the precautions included in paragraphs 2-5.1, 2-5.2, and 2-5.3 shall be observed.

Table 4-9. Quick Reference Data, Slings

ITEM NOMENCLATURE	DRAWING OR DL/LD	FIGURE NO.	MIP NO. OR OR-99/	ITEM WEIGHT (LBS)	SAFE WORKING LOAD (LBS)	TEST LOAD (LBS)	TEST DURATION (MIN.)
Sling, Oxidant Tank/ Condenser Lifting	Dwg 6276505	4-79			500	1,000	2
Sling, Turbine Gearbox Lifting	Dwg 6276440	4-80			250	500	2
Sling, Pallet, Mk 70 Mod 2	Dwg 2644148	4-81	7721/R47	120	8,000	16,000	2
Sling, Hoisting, Mk 78 Mod 0	LD 492910	4-82	8-153	56	750	1,500	2
Sling, Pallet, Mk 85 Mod 0	DL 2614969	4-83	7721/R53	13	4,000	8,000	2
		4-84	7721/R53	13	4,000	11,000	2
Sling, Pallet, Mk 86 Mod 0	DL 2614970	4-85	7721/R56	13	4,000	8,000	2
Sling, Pallet, Mk 87 Mod 0	DL 2614971	4-86	7721/R59	14	4,000	8,000	2
Sling, Hoisting, Mk 92 Mod 0	DL 2614975	4-87	7721/R41	20	4,000	8,000	5
Sling, Pallet, MK 93 Mod 0	DL 2642587	4-88	7721/R62	55	8,000	16,000	2
Sling, Torpedo, Mk 94 Mod 0	DL 2642627	4-89	7521/R35	5-½	5,000	10,000	5
Sling, Torpedo, Mk 95 Mod 0	DL 2642629	4-90	7521/R35	6	5,000	10,000	5
Sling, Weapons Handling, Mk 99 Mod 0	DL 2642914	4-91	7222/R55	26	6,000	12,000	2
Sling, Pallet, Mk 100 Mod 1	DL 2643919	4-92	7121/R55	15	4,000	8,000	2
Sling, Mine, Mk 101 Mod 0	DL 2643098	4-93	7521/R35	5	5,000	10,000	5
Sling, Torpedo, MK 102 Mod 0	DL 2643168	4-94	7521/R35	5	5,000	10,000	5
Sling, Mk 103 Mod 0	DL 2643343	4-95	7521/R35	1	500	1,000	5
Sling, Mk 104 Mod 0	DL 2643341	4-96	7521/R35	1	500	1,000	5

NOTE: Test frequency columns have been deleted in accordance with paragraph 4-1.

Table 4-9. Quick Reference Data, Slings

ITEM NOMENCLATURE	DRAWING OR DL/LD	FIGURE NO.	MIP NO. OR OR-99/	ITEM WEIGHT (LBS)	SAFE WORKING LOAD (LBS)	TEST LOAD (LBS)	TEST DURATION (MIN.)
Pendant for Sling, Hoisting, Mk 105 Mod 0	DL 2643482	4-97	7721/R38	14	6,000	12,000	5
Legs (color coded Orange) for Sling, Hoisting, Mk 105 Mod 0	DL 2643485	4-98	7721/R38	6	4,000	16,000	5
Legs (color coded Green) for Sling, Hoisting, Mk 105 Mod 0 and Mk 128 Mod 0	DL 2644390	4-99	7721/R38	10	4,000	16,000	5
Sling, Mk 106 Mod 0	DL 1874045	4-100	7521/R35	3	1,000	2,000	5
Sling, Mk 107 Mod 0	DL 2643781	4-101	7521/R35	6	5,000	10,000	5
Sling, Mk 108 Mod 0	DL 2643838	4-102		2	200	240	2
Sling, Container Lifting, Mk 109 Mod 1	DL 5167555	4-103	7222/R40	65	5,000	10,000	2
Sling, Mk 111 Mod 0	DL 2643792	4-104	7521/R35	4	5,000	10,000	5
Sling, MK 113 Mod 0	DL 1874082	4-105	7521/R35	4	2,500	5,000	5
Sling, Mk 114 Mod 0	DL 2643810	4-106	7521/R35	4	5,000	10,000	5
Sling, Weapons Handling Mk 115 Mod 0	DL 3014507	4-107		7	2,500	5,000	2
Sling, Container, Mk 116 Mod 0	DL 2644528	4-108	J-4001/1	86	5,000	10,000	2
Sling, Mk 117 Mod 0	DL 2644585	4-109	8-284	33	900	1,800	2
Sling, Mk 118 Mod 0	Dwg 2470110	4-110		7	4,000	8,000	5
Sling, Mk 121 Mod 0	DL 2483352	4-111	7721/R85	10	2,400	4,800	2
Sling, Pallet, Mk 123 Mod 0	DL 2645180	4-112	7721/R50	36	6,000	12,000	2

NOTE: Test frequency columns have been deleted in accordance with paragraph 4-1.

Table 4-9. Quick Reference Data, Slings

ITEM NOMENCLATURE	DRAWING OR DL/LD	FIGURE NO.	MIP NO. OR OR-99/	ITEM WEIGHT (LBS)	SAFE WORKING LOAD (LBS)	TEST LOAD (LBS)	TEST DURATION (MIN.)
Sling, Hoisting, Mk 126 Mod 0	DL 2645301	4-113	7222/R45	20	1,500	3,000	2
Sling, Mk 127 Mod 0	DL 2878413	4-114	None	3	1,000	2,000	2
Pendant for Sling, Hoisting, Mk 128 Mod 0	DL 5166422	4-115	7222/R47	14	4,000	8,000	5
Sling, Hoisting Clamp Frame Assembly, Mk 129 Mod 0	DL 5166414	4-116	86Q1000	12	300	600	2
Sling, Pallet, Mk 130 Mod 1	DL 5167661	4-117	7721/R46	18	8,000	16,000	2
Sling, Pallet, MK 131 Mod 1	DL 5167662	4-118	7721/R46	24	8,000	16,000	2
Sling, Pallet, Mk 132 Mod 1	DL 5167663	4-119	7721//R46		8,000	16,000	2
Sling, Pallet, Mk 133 Mod 1	DL 5167664	4-120	7721/R46	30	8,000	16,000	2
Sling, Pallet, Mk 134 Mod 1	DL 5167665	4-121	7721/R46	40	8,000	16,000	2
Sling, Hoisting, Mk 136 Mod 0	DL 3262287	4-122		3	1,900	3,800	5
Sling, Mk 137 Mod 0	DL 3262106	4-123		3	400	800	5
Sling, Mk 138 Mod 0	DL 5166741	4-124	7721/R87	8	2,200	4,400	2
Sling, Lift Mk 140 Mod 0	DL 5166782	4-125		3	275	550	2
Sling, Battery Mk 141 Mod 0	DL 5166853	4-126		9	3,000	6,000	2
Sling, Forklift Mk 142 Mod 0	DL 5166852	4-127	7721/R37	43	15,000	30,000	2
Sling, Mk 143 Mod 0	DL 5166696	4-128	7222/R50	7	4,300	8,600	2
Sling, Pivot Fixture, Mk 146 Mod 0	PL 6169839-9	4-129	7721/R73/ 8967000	5	570	1,140	2

NOTE: Test frequency columns have been deleted in accordance with paragraph 4-1.

Table 4-9. Quick Reference Data, Slings

ITEM NOMENCLATURE	DRAWING OR DL/LD	FIGURE NO.	MIP NO. OR OR-99/	ITEM WEIGHT (LBS)	SAFE WORKING LOAD (LBS)	TEST LOAD (LBS)	TEST DURATION (MIN.)
Sling, Plenum Cell Cover, Mk 147 Mod 0	PL 6169840-9	4-130	7221/R72/ 8967000	7	*570 # ---	1,140 570	2 2
Sling, Missile Module, Mk 149 Mod 0	PL 6169843-9	4-131 (1) 4-132 (2)	8967000	678	*58,000 # ----	58,890 116,000	2 2
Sling, Missile Module, Mk 150 Mod 0	PL 6169842-9	4-133 (1) 4-134 (2)	8967000	358	56,000	112,000	2
Sling, Pendant, Mk 151 Mod 0	PL 6169841-9	4-135	7221/R74 8967000	6	750	1,500	2
Sling, Container Lift, Mk 152 Mod 0	DL 5167256	4-136	7221/R77	106	7,000	14,000	2
Sling, Weapons Handling, Mk 153 Mod 0	DL 5167582	4-137	7221/R88	75	10,000	20,000	2
Sling, Mk 154 Mod 0	DL 5167321	4-138	7521/R35	10	8,000	16,000	5
Sling, Weapons Handling, Mk 155 Mod 0	DL 5167467	4-139		50	6,000	12,000	2
Sling, Weapons Handling, Mk 156 Mod 0	DL 5167791	4-140		15	1,800	3,600	2
Sling, MK 158 Mod 0	DL 5167757	4-141	7221/R87	18	2,200	4,400	2
Sling, MK 159 Mod 0	DL 6212589	4-142	7521/R35	3	5,000	10,000	5
Sling, Mk 161 Mod 0	DL 6212810	4-143	7121/R50	14	3,000	6,000	2
Sling, Mk 162 Mod 0	DL 6212682	4-144	7221/R84	20	7,500	15,000	2
Sling, Weapon Handling, Mk 163 Mod 0	DL 5167632	4-145	7521/R35	1	2,500	5,000	5

* Test No. 1
\# Test No. 2
NOTE: Test frequency columns have been deleted in accordance with paragraph 4-1.

Table 4-9. Quick Reference Data, Slings

ITEM NOMENCLATURE	DRAWING OR DL/LD	FIGURE NO.	MIP NO. OR OR-99/	ITEM WEIGHT (LBS)	SAFE WORKING LOAD (LBS)	TEST LOAD (LBS)	TEST DURATION (MIN.)
Sling, Mk 164 Mod 0	DL 6212766	4-146	7121/R51	12	2,000	4,000	2
Sling, Mk 165 Mod 0	DL 6213009	4-147	7221/R76	42	11,500	23,000	2
Sling, Mk 165 Mod 0	DL 6213750	4-148	7221/R76	45	17,000	34,000	2
Sling, Mk 166 Mod 0	DL 6213006	4-149	7521/R35	10	8,000	16,000	5
Sling, Mk 169 Mod 0	DL 6213384	4-150	7221/R82	18	1,250	2,500	2
Sling, Mk 170 Mod 0	P/N 3281102	4-151	None		125	250	2
Sling, Mk 171 Mod 0	DL 6213569	4-152		22	5,000	10,000	2
Sling, Mk 172 Mod 0	DL 6213568	4-153	7521/R35	12	5,000	10,000	5
Sling, Mk 173 Mod 0	DL 6213663	4-154	8967000	7	100	180	2
Sling, Mk 176 Mod 0	DL 6213844	4-155	8967000	12.50	2,500	5,000	2
Sling, Container Lifting, HLU-265/E	DL 1685AS100	4-156	7221/R75	118	7,000	14,000	2

NOTE: Test frequency columns have been deleted in accordance with paragraph 4-1.

SLING, OXIDANT TANK/CONDENSER LIFTING
NAVSEA DRAWING 6276505
NSN - NOT ASSIGNED

SWL	TEST LOAD	TEST DURATION
500 POUNDS	1,000 POUNDS	2 MINUTES

NOTE

Refer to chapter 3 for test fixture illustration and description

This test is also used to test the oxidant tank/condenser lifting fixture (6276425)

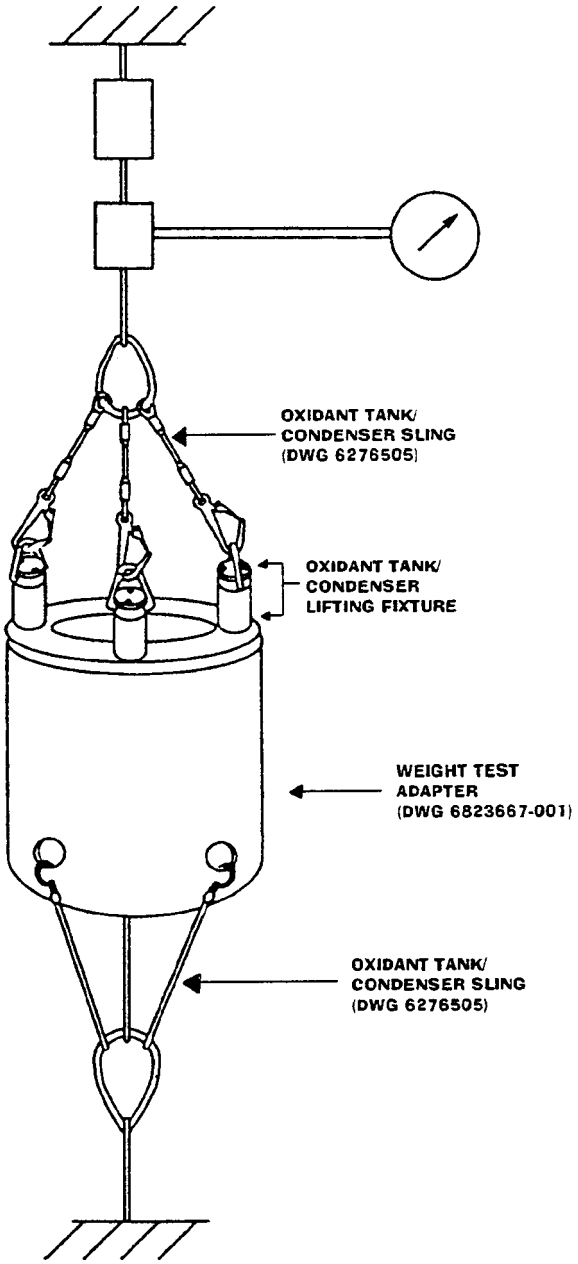

*Some details of sling configuration omitted

FIGURE 4-79. Test Arrangement, Oxidant Tank/Condenser Lifting Sling

SLING, TURBINE GEARBOX LIFTING
NAVSEA DRAWING 6276440
NSN NOT ASSIGNED

SWL	TEST LOAD	TEST DURATION
250 POUNDS	500 POUNDS	2 MINUTES

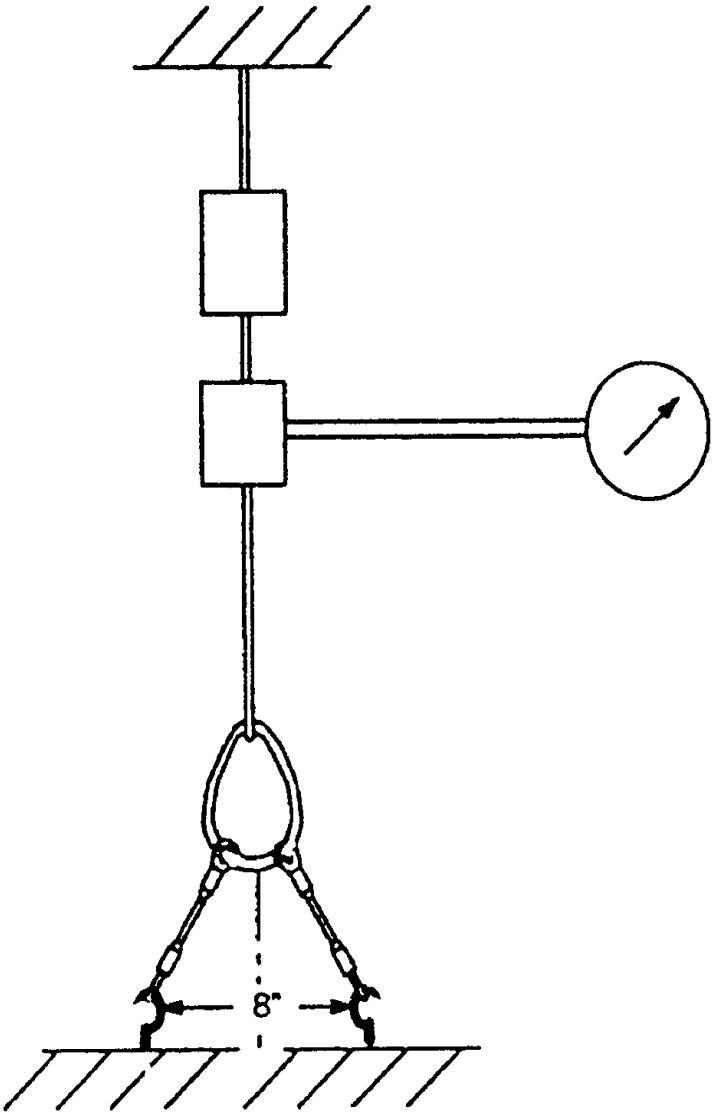

FIGURE 4-80. Test Arrangement, Turbine Gearbox Lifting Sling

SLING, PALLET,
MK 70 MOD 2
DL 2644148
NSN 1H 3940-00-627-9603

SWL	TEST LOAD	TEST DURATION
8,000 POUNDS	16,000 POUNDS	2 MINUTES

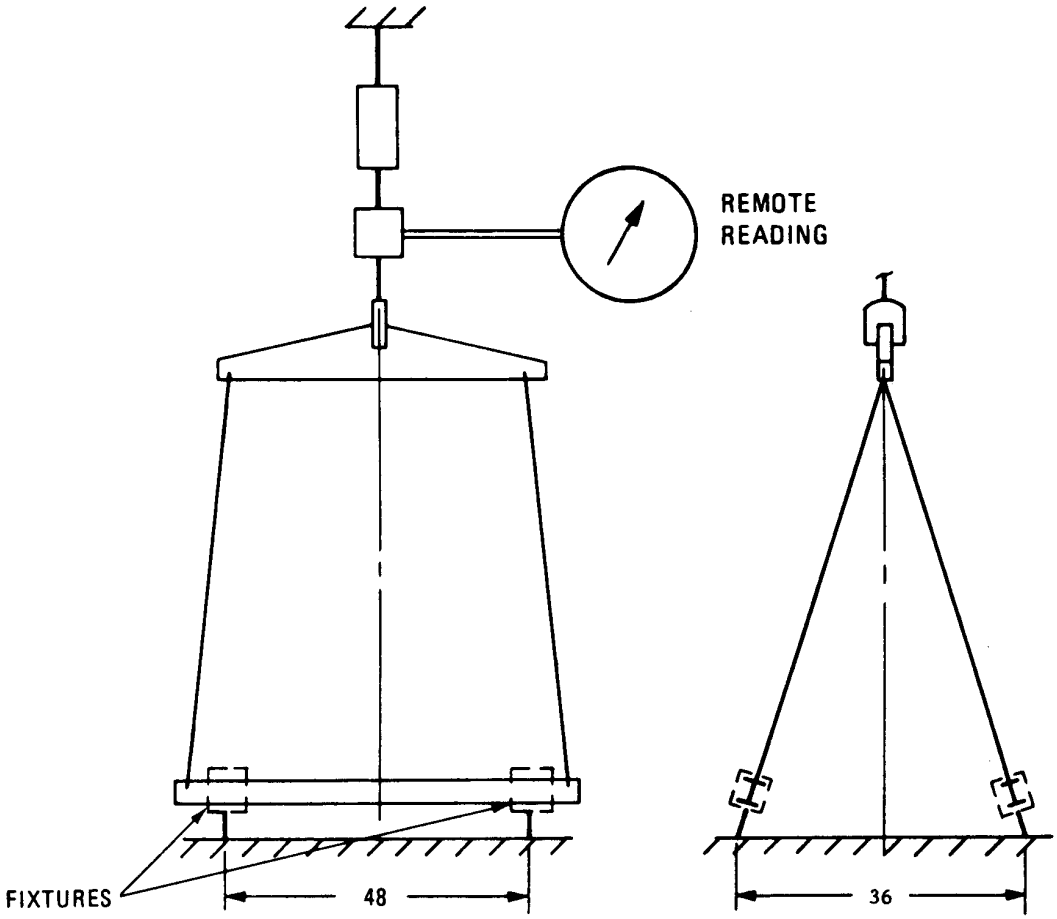

FIGURE 4-81. Test Arrangement, Pallet Sling, Mk 70 Mod 2

SLING, HOISTING,
MK 78 MOD 0
LD 492910
NSN 7H 1450-00-019-1349

SWL	TEST LOAD	TEST DURATION
750 POUNDS	1,500 POUNDS	2 MINUTES

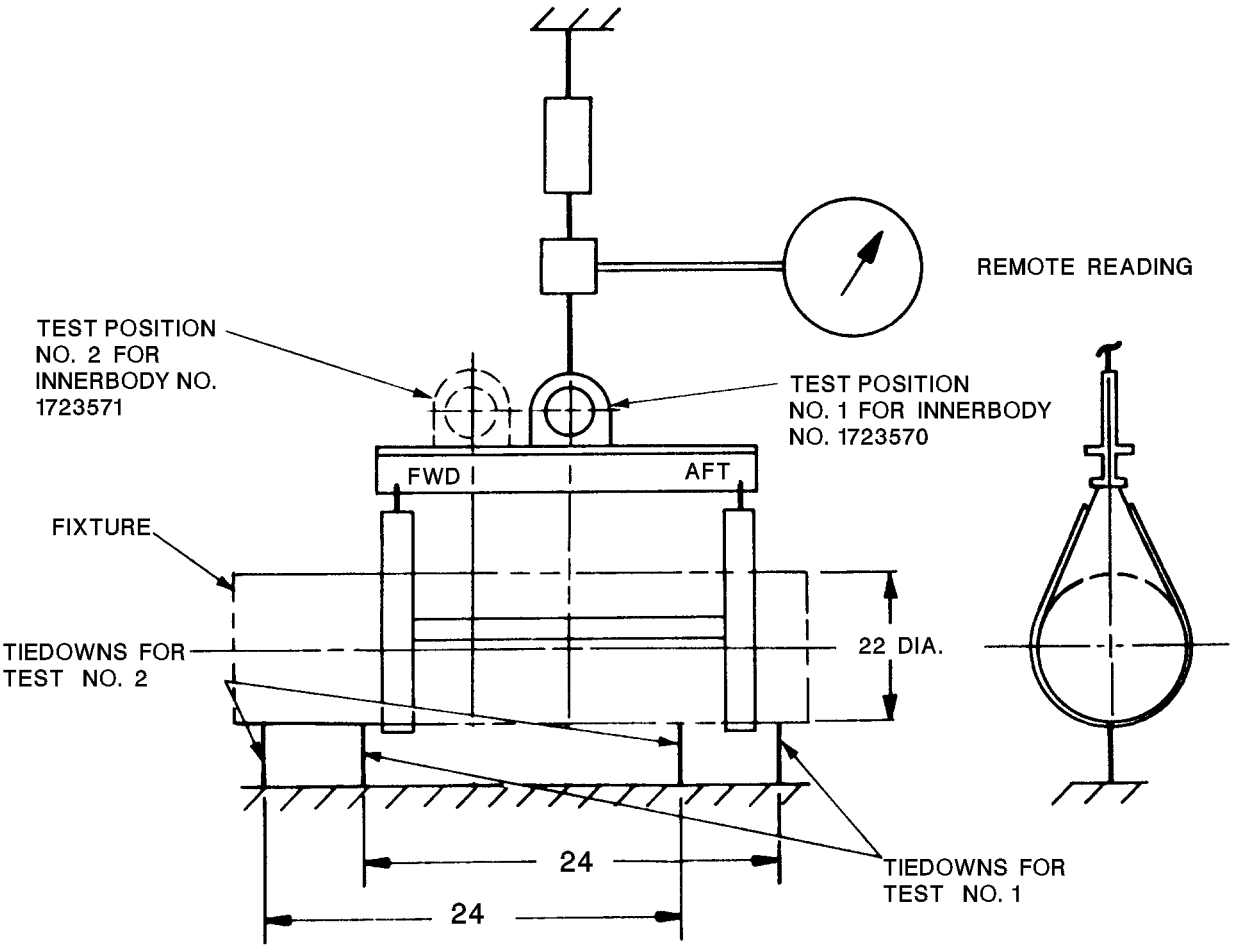

FIGURE 4-82. Test Arrangement, Hoisting Sling, Mk 78 Mod 0

SLING, PALLET,
MK 85 MOD 0
DL 2614969
NSN 1H 1450-00-169-6926

SWL	TEST LOAD	TEST DURATION
4,000 POUNDS	8,000 POUNDS	2 MINUTES

CAUTION

The corner edge bearing surfaces of fixture shall be rounded (1.5 inch radius minimum) to prevent damage to sling legs, as shown below.

NOTE

Perform all weight testing without tubings installed. Upon test completion, install tubing.

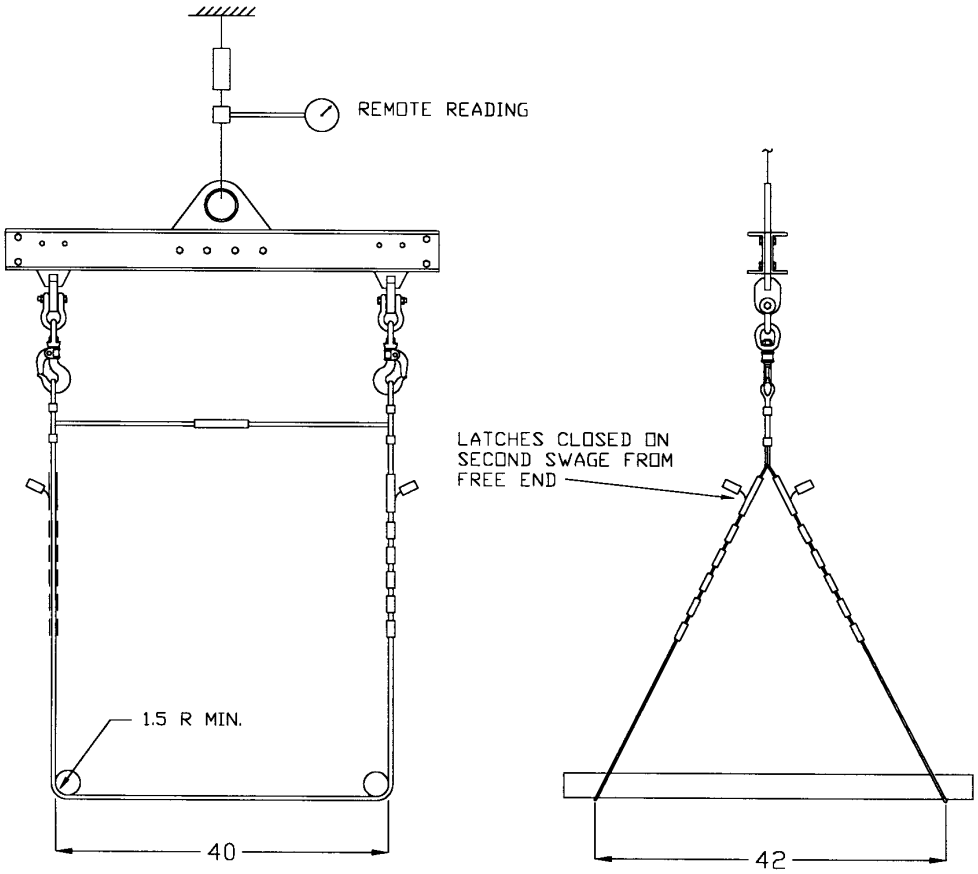

FIGURE 4-83. Test Arrangement, Pallet Sling, Mk 85 Mod 0
(Used for seven swage slings only)

SLING, PALLET,
MK 85 MOD 0
DL 2614969
NSN 1H 1450-00-169-6926

SWL	TEST LOAD	TEST DURATION
4,000 POUNDS	11,000 POUNDS	2 MINUTES

ALTERNATE ARRANGEMENT

NOTE

Perform all weight testing without tubings installed. Upon test completion, install tubing.

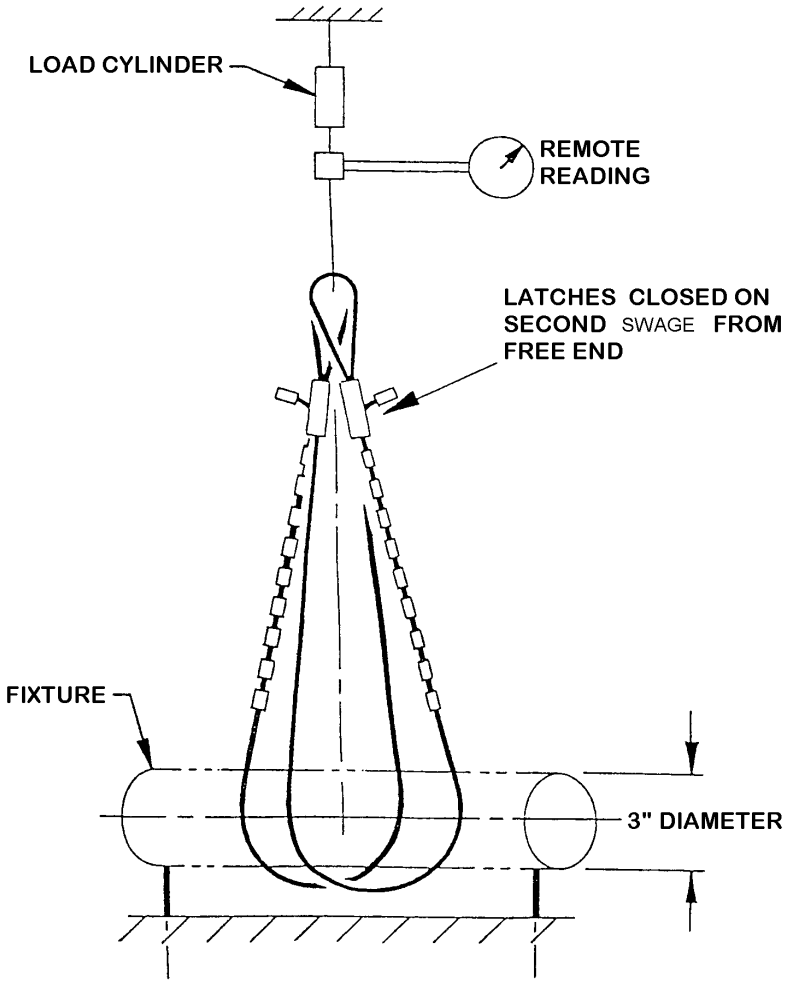

FIGURE 4-84. Test Arrangement, Pallet Sling, Mk 85 Mod 0
(Used for 11 swage slings only)

SLING, PALLET,
MK 86 MOD 0
DL 2614970
NSN 1H 1450-00-169-6927

SWL	TEST LOAD	TEST DURATION
4,000 POUNDS	8,000 POUNDS	2 MINUTES

CAUTION

The corner edge bearing surfaces of fixture shall be rounded (1.5 inch radius minimum) to prevent damage to sling legs, as shown below.

NOTE

Performs all weght testing without tubings installed. Upon test completion, install tubing.

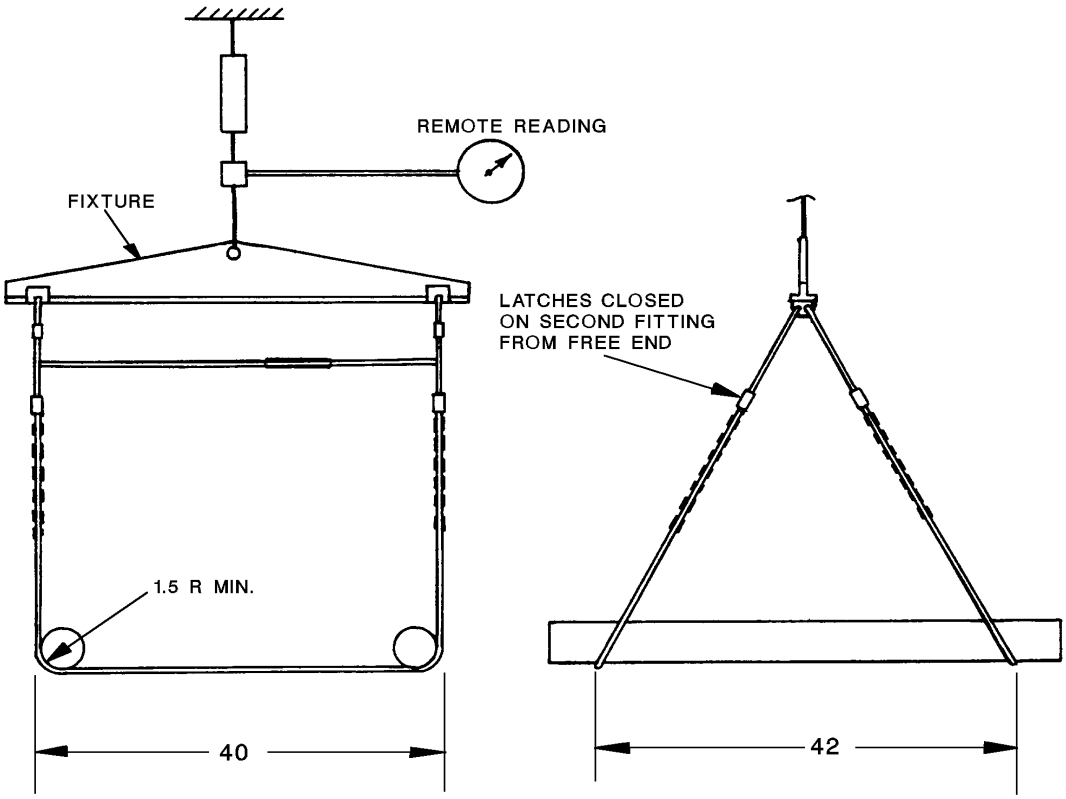

FIGURE 4-85. Test Arrangement, Pallet Sling, Mk 86 Mod 0

SLING, PALLET,
MK 87 MOD 0
DL 2614971
NSN 1H 1450-00-169-6928

SWL	TEST LOAD	TEST DURATION
4,000 POUNDS	8,000 POUNDS	2 MINUTES

CAUTION

The corner edge bearing surfaces of fixture shall be rounded (1.5 inch radius minimum) to prevent damage to sling legs, as shown below.

NOTE

Performs all weght testing without tubings installed. Upon test completion, install tubing.

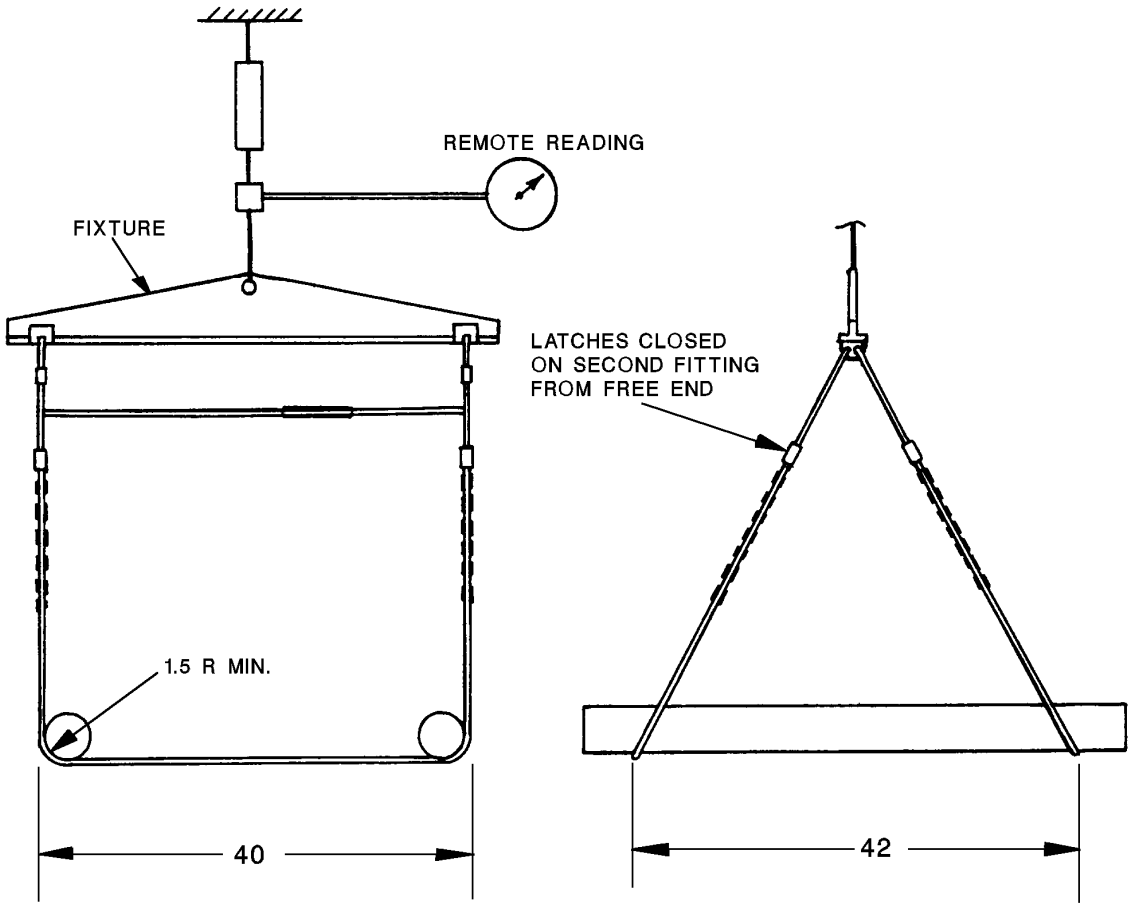

FIGURE 4-86. Test Arrangement, Pallet Sling, MK 87 Mod 0

SLING, HOISTING,
MK 92 MOD 0
DL 2614975
NSN 9Z 4020-00-238-6148

SWL	TEST LOAD	TEST DURATION
4,000 POUNDS	8,000 POUNDS	5 MINUTES

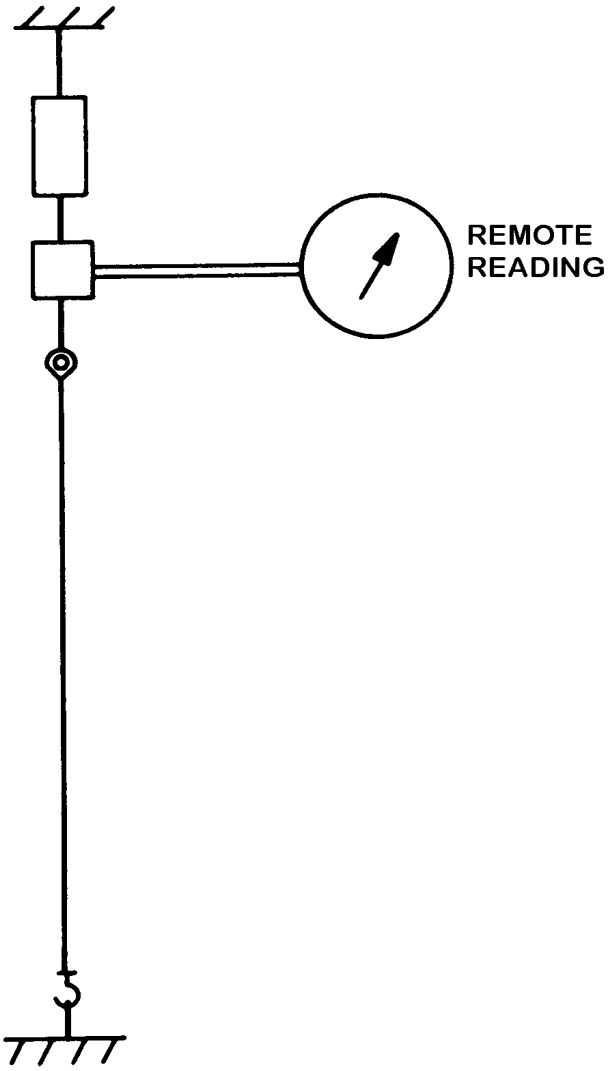

FIGURE 4-87. Test Arrangement, Hoisting Sling, Mk 92 Mod 0

SLING, PALLET,
MK 93 MOD 0
DL 2642587
NSN 1H 3940-00-089-8025

SWL	TEST LOAD	TEST DURATION
8,000 POUNDS	16,000 POUNDS	2 MINUTES

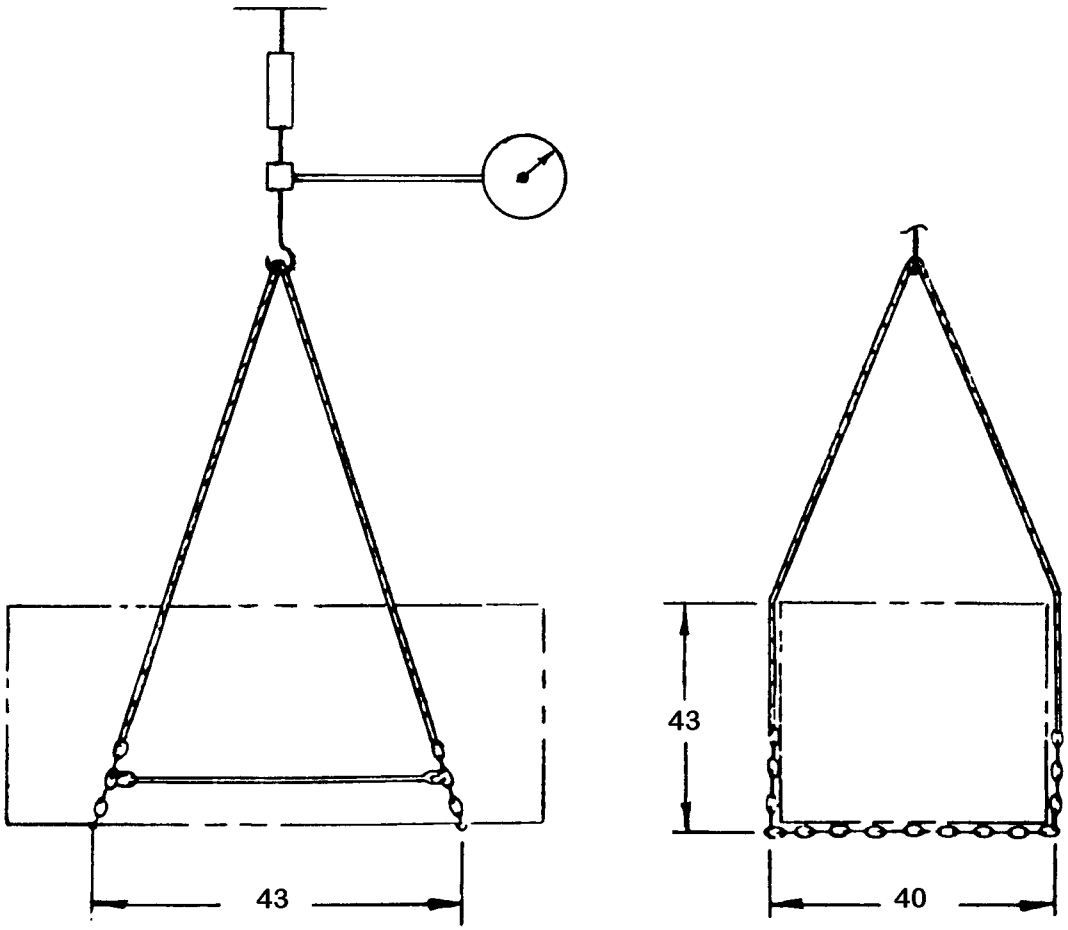

FIGURE 4-88. Test Arrangement, Pallet Sling, Mk 93 Mod 0

SLING, TORPEDO,
MK 94 MOD 0
DL 2642627
NSN 1H 4921-00-878-4374

SWL	TEST LOAD	TEST DURATION
5,000 POUNDS	10,000 POUNDS	5 MINUTES

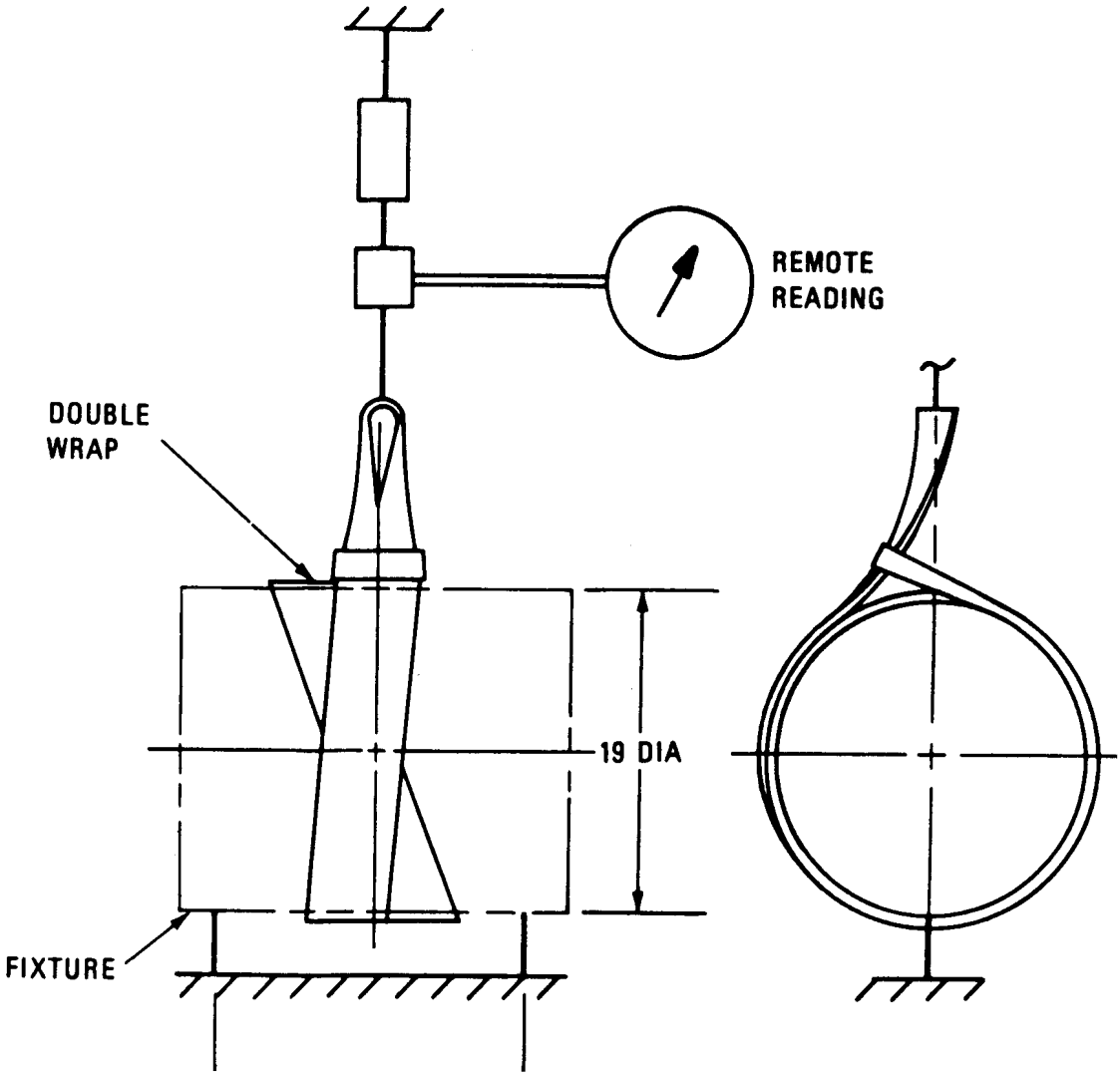

FIGURE 4-89. Test Arrangement, Torpedo Sling, Mk 94 Mod 0

SLING, TORPEDO,
MK 95 MOD 0
DL 2642629
NSN 1H 4921-00-878-4375

SWL	TEST LOAD	TEST DURATION
5,000 POUNDS	10,000 POUNDS	5 MINUTES

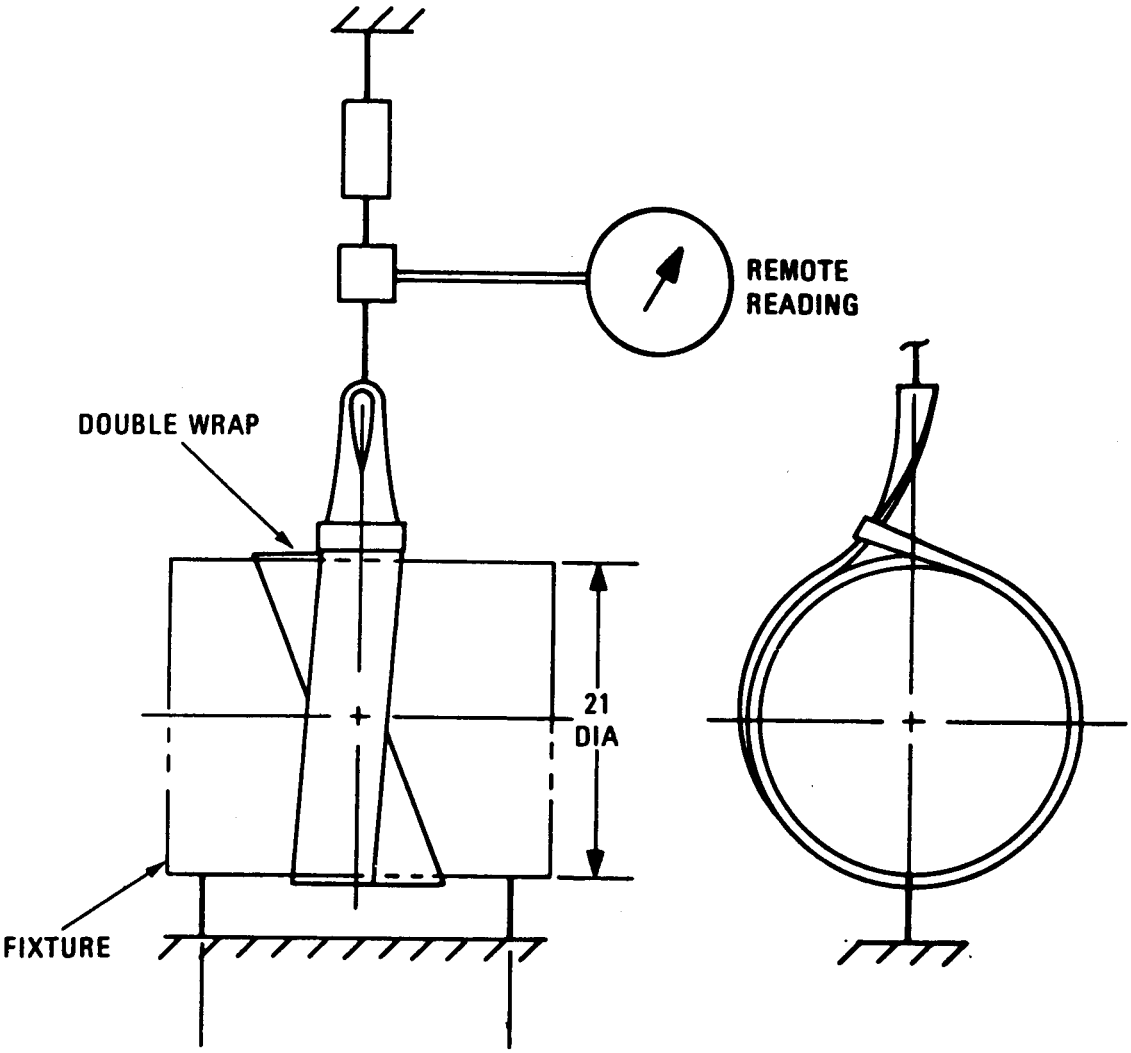

FIGURE 4-90. Test Arrangement, Torpedo Sling, Mk 95 Mod 0

SLING, WEAPONS HANDLING,
MK 99 MOD 0
DL 2642914
NSN 9Z 3940-00-477-8853

SWL	TEST LOAD	TEST DURATION
6,000 POUNDS	12,000 POUNDS	2 MINUTES

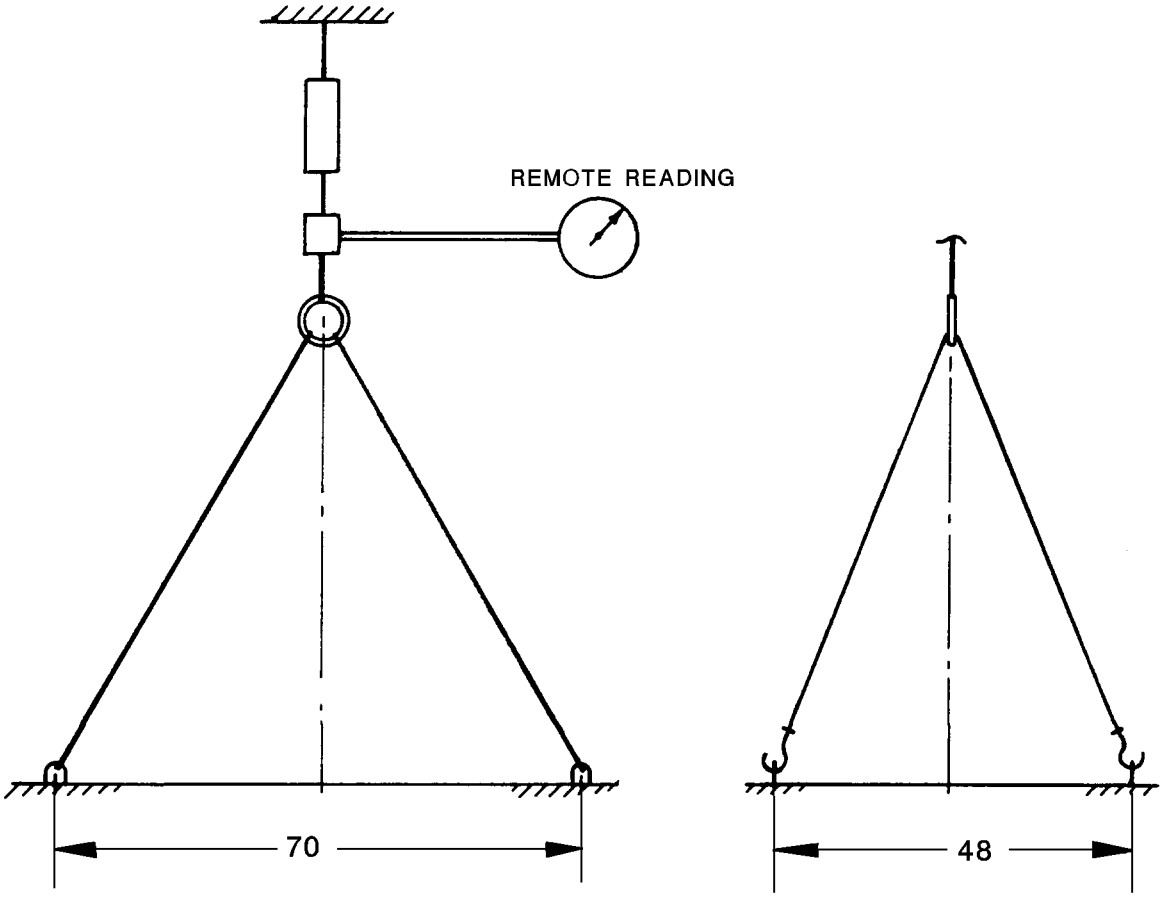

FIGURE 4-91. Test Arrangement, Weapons Handling Sling, Mk 99 Mod 0

SLING, PALLET,
MK 100 MOD 1
DL 2643919
NSN 9Z 3940-00-004-9175

SWL	TEST LOAD	TEST DURATION
4,000 POUNDS	8,000 POUNDS	2 MINUTES

CAUTION

The corner edge bearing surfaces of fixture shall be rounded (1.5 inch radius minimum) to prevent damage to sling legs, as shown below.

NOTE

Performs all weight testing without tubings installed. Upon test completion, install tubing.

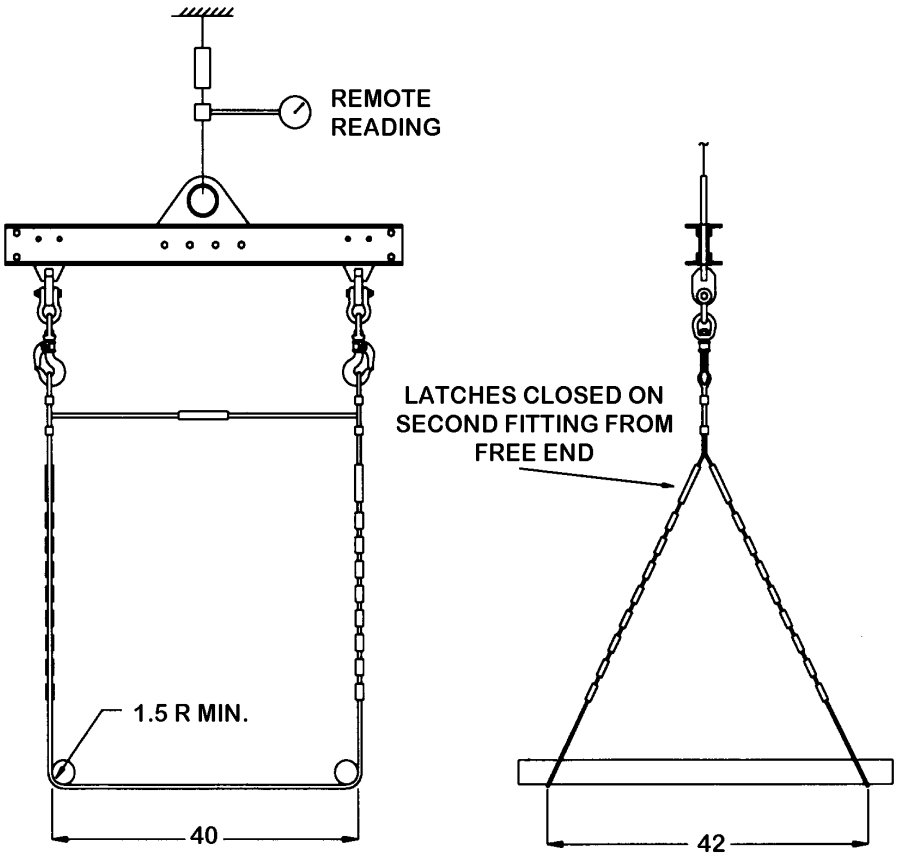

FIGURE 4-92. Test Arrangement, Pallet Sling, Mk 100 Mod 1

SLING, MINE,
MK 101 MOD 0
DL 2643098
NSN 1H 4923-00-118-5845

SWL	TEST LOAD	TEST DURATION
5,000 POUNDS	10,000 POUNDS	5 MINUTES

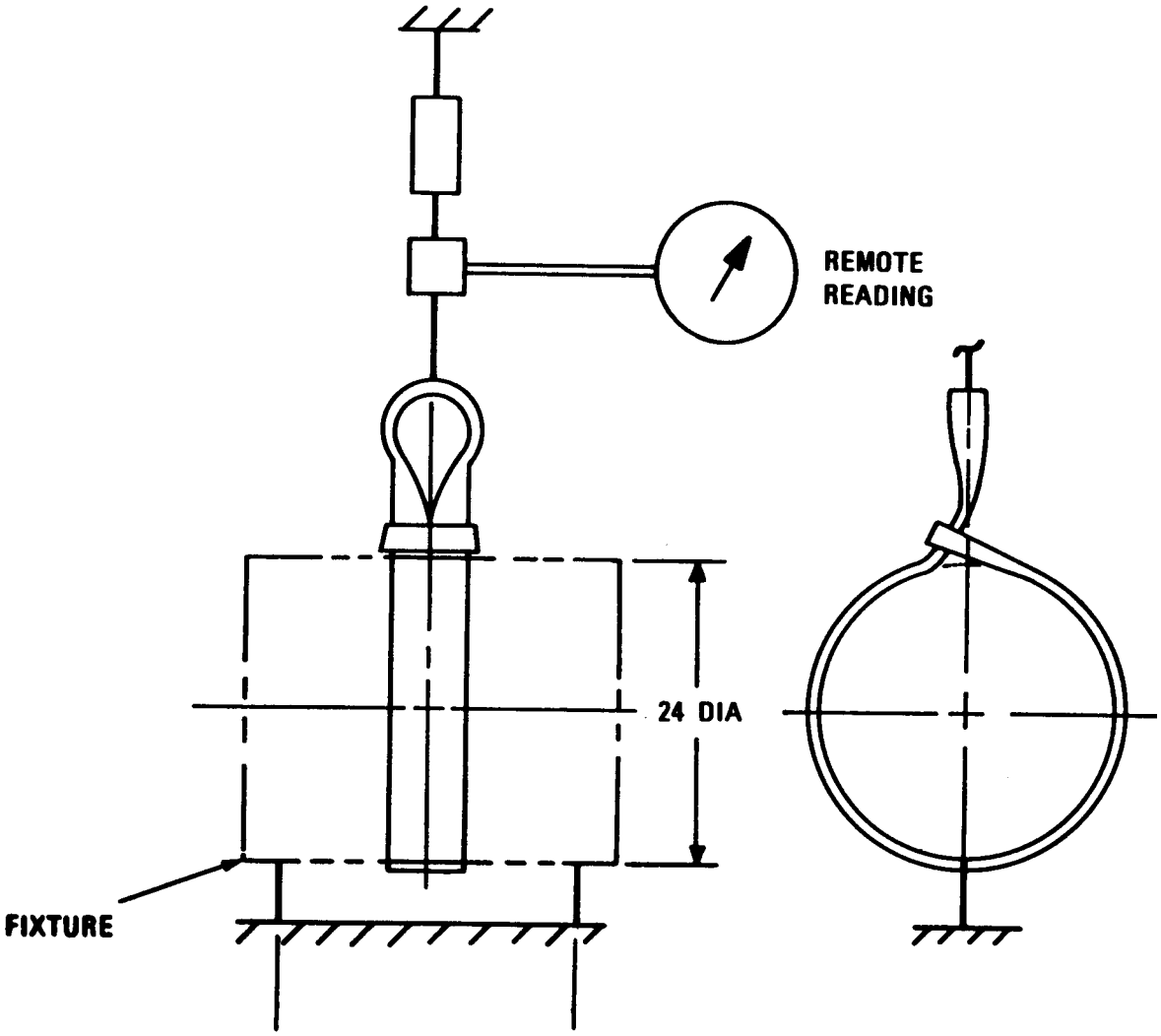

FIGURE 4-93. Test Arrangement, Mine Sling, Mk 101 Mod 0

SLING, TORPEDO,
MK 102 MOD 0
DL 2643168
NSN 1H 4921-00-118-5846

SWL	TEST LOAD	TEST DURATION
5,000 POUNDS	10,000 POUNDS	5 MINUTES

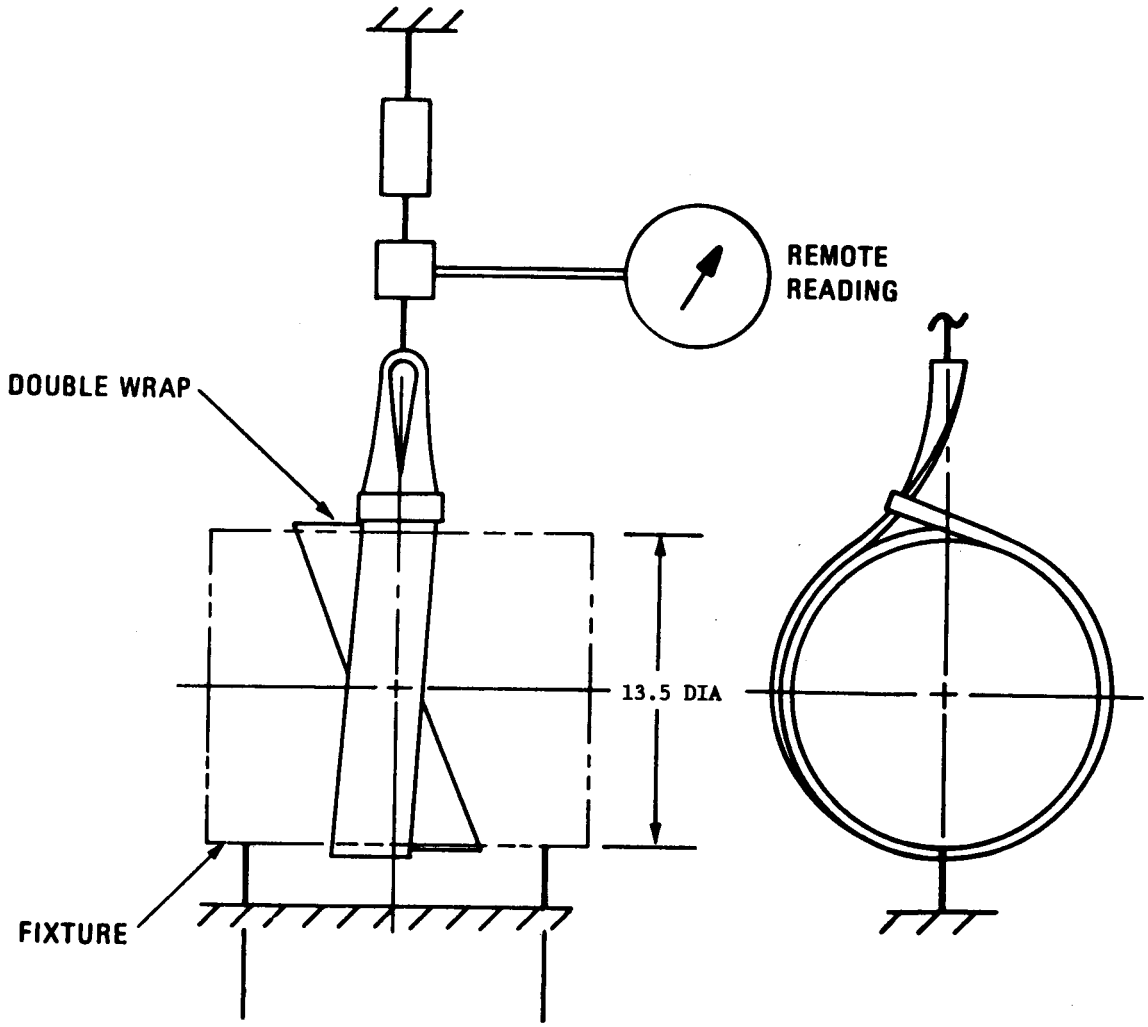

FIGURE 4-94. Test Arrangement, Torpedo Sling, Mk 102 Mod 0

SLING,
MK 103 MOD 0
DL 2643343
NSN 9Z 3940-01-172-6007

SWL	TEST LOAD	TEST DURATION
500 POUNDS	1,000 POUNDS	5 MINUTES

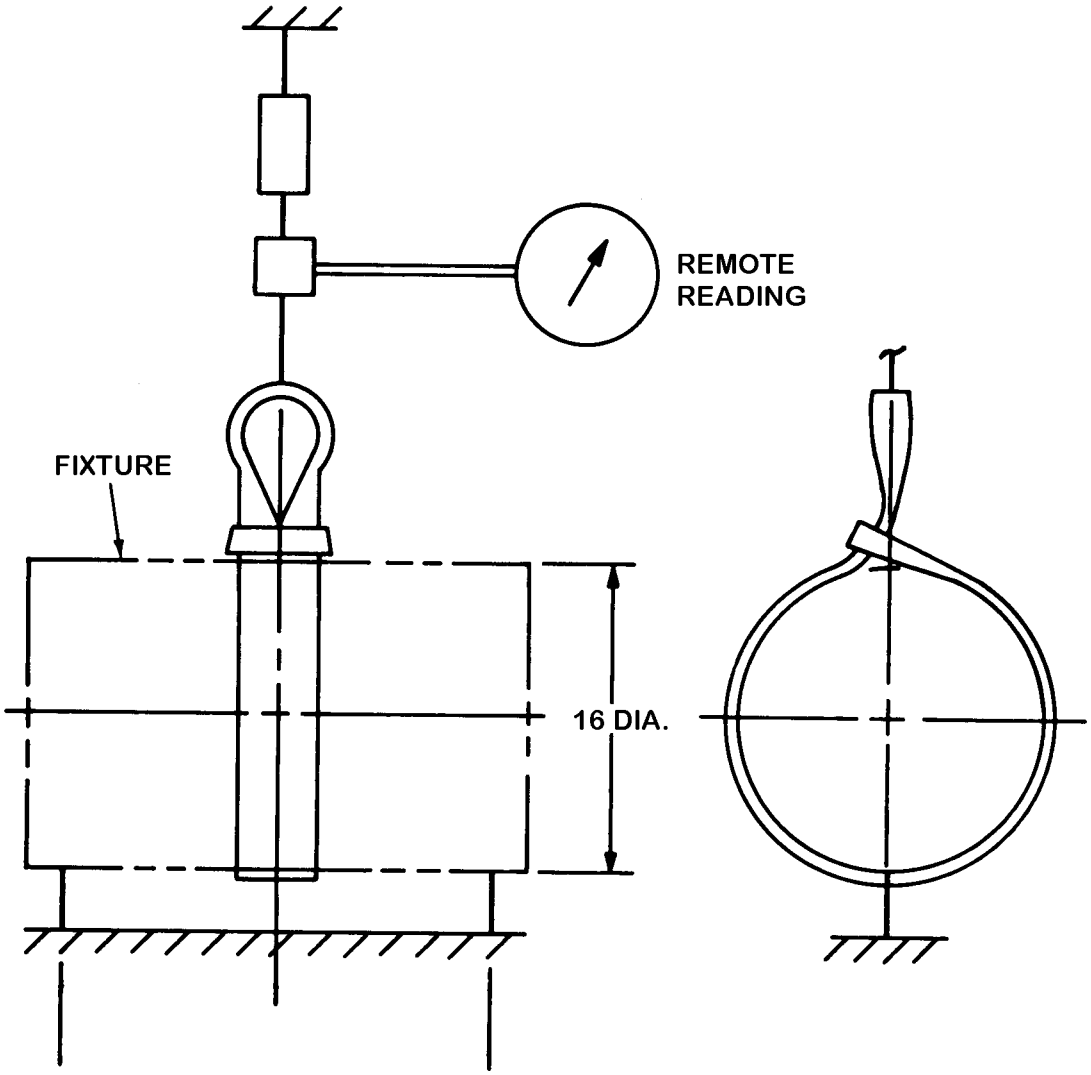

FIGURE 4-95. Test Arrangement, Sling, Mk 103 Mod 0

SLING,
MK 104 MOD 0
DL 2643341
NSN 9Z 3940-01-172-6005

SWL	TEST LOAD	TEST DURATION
500 POUNDS	1,000 POUNDS	5 MINUTES

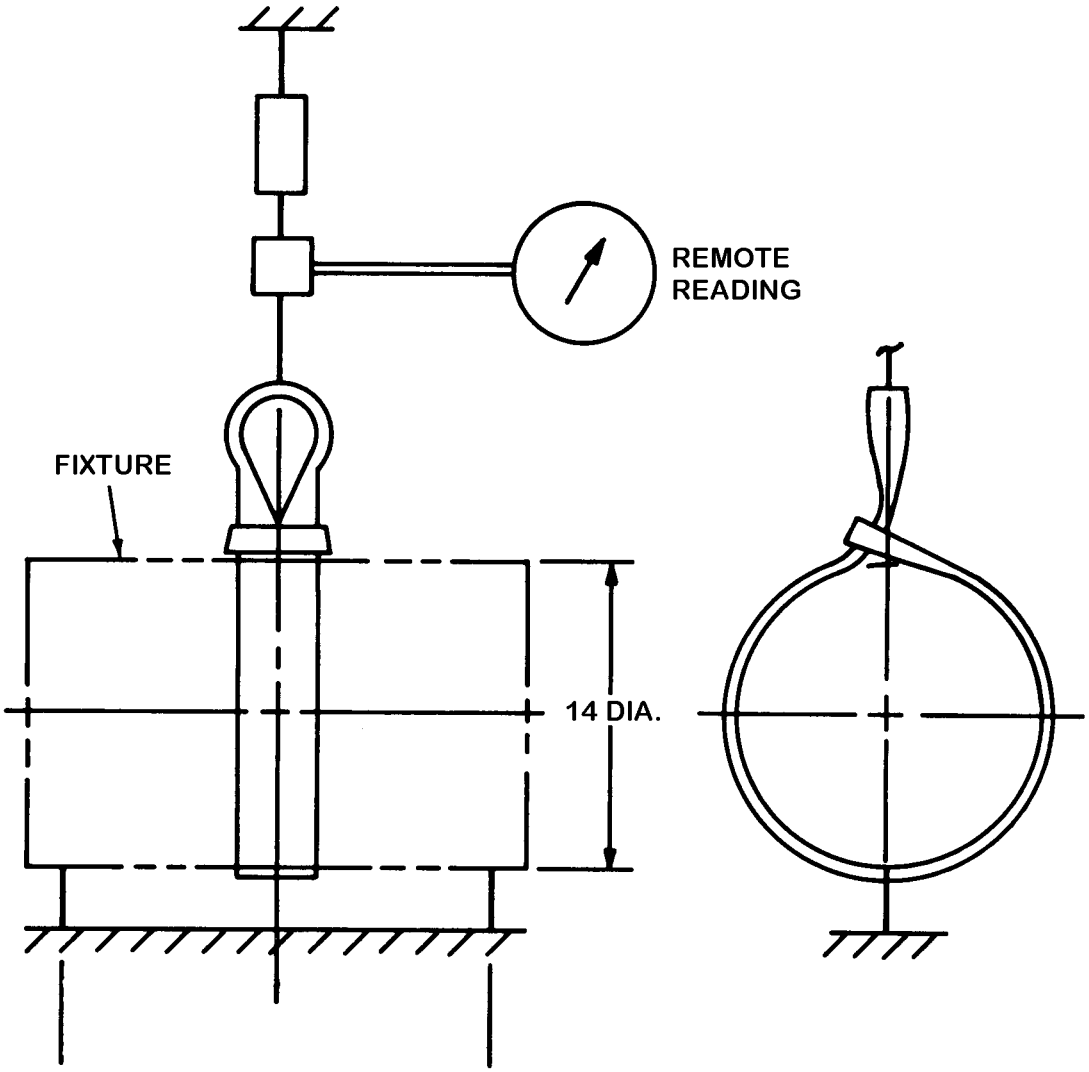

FIGURE 4-96. Test Arrangement, Sling, Mk 104 Mod 0

PENDANT FOR SLING, HOISTING,
MK 105 MOD 0
DL 2643482
NSN 1H 1450-00-414-7172

SWL	TEST LOAD	TEST DURATION
6,000 POUNDS	12,000 POUNDS	5 MINUTES

NOTE

Test legs in pairs as shown in figure 4-98.

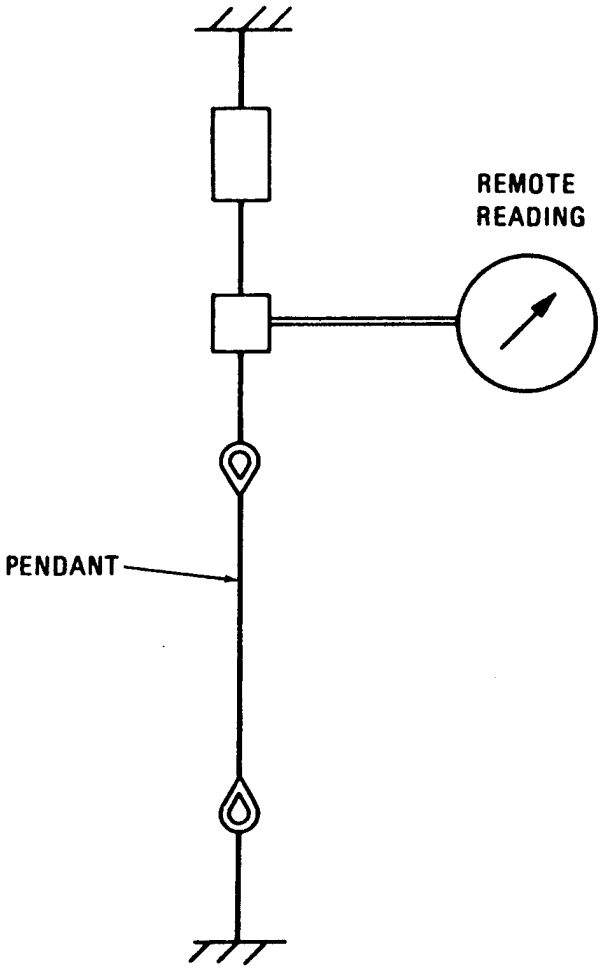

FIGURE 4-97. Test Arrangement, Pendant for Hoisting Sling, Mk 105 Mod 0

LEGS (COLOR CODED ORANGE) FOR SLING, HOISTING,
MK 105 MOD 0
DWG 2643485
NSN 9C 1450-01-219-1494

SWL	TEST LOAD	TEST DURATION
4,000 POUNDS (EACH LEG)	8,000 POUNDS (ONE LEG)	5 MINUTES
	16,000 POUNDS (TWO LEGS)	5 MINUTES

Pick up ring cross section or mandrel shall be a minimum of 1¼-inch diameter.

NOTE

Sling legs shall be attached to the ring or mandrel in a choker fashion as shown in figure 4-100.

NOTE

All legs shall be tested. Maximum two (2) legs at one time.

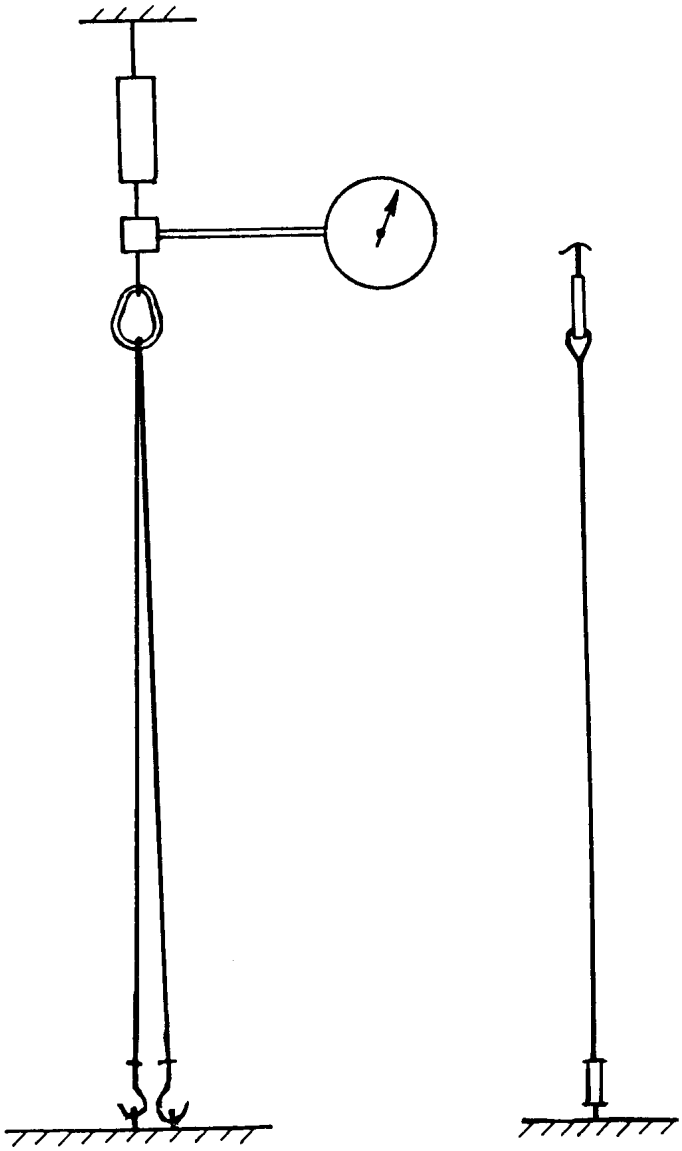

FIGURE 4-98. Test Arrangement, Legs (Color Coded Orange) for Hoisting Sling, Mk 105 Mod 0

LEGS (COLOR CODED GREEN) FOR SLING, HOISTING, MK 105 MOD 0 AND MK 128 MOD 0 DL 2644390 NSN 1H 4020-00-881-8736

SWL	TEST LOAD	TEST DURATION
4,000 POUNDS (EACH LEG)	8,000 POUNDS (ONE LEG)	5 MINUTES
	16,000 POUNDS (TWO LEGS)	5 MINUTES

Pick up ring cross section or mandrel shall be a minimum of 1¼-inch diameter.

NOTE

Sling legs shall be attached to the ring or mandrel in a choker fashion as shown in figure 4-100.

NOTE

All legs shall be tested. Maximum two (2) legs tested at one time.

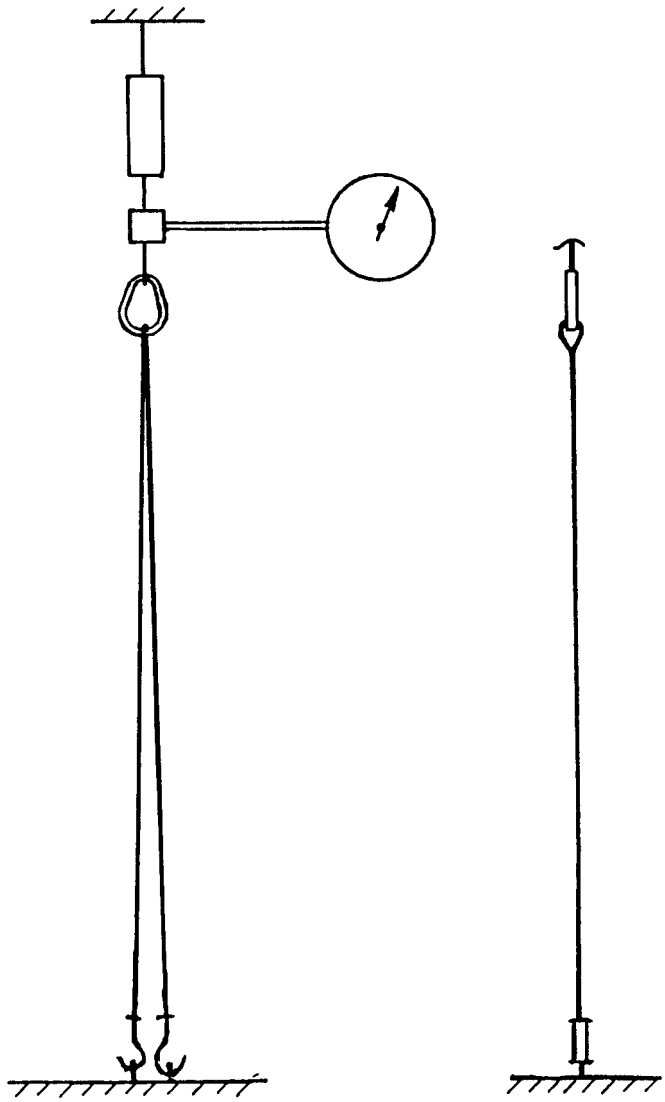

FIGURE 4-99. Test Arrangement, Legs (Color Coded Green) for Hoisting Slings, Mk 105 Mod 0 and Mk 128 Mod 0

SLING,
MK 106 MOD 0
DL 1874045
NSN 1H 4921-00-923-9089

SWL	TEST LOAD	TEST DURATION
1,000 POUNDS	2,000 POUNDS	5 MINUTES

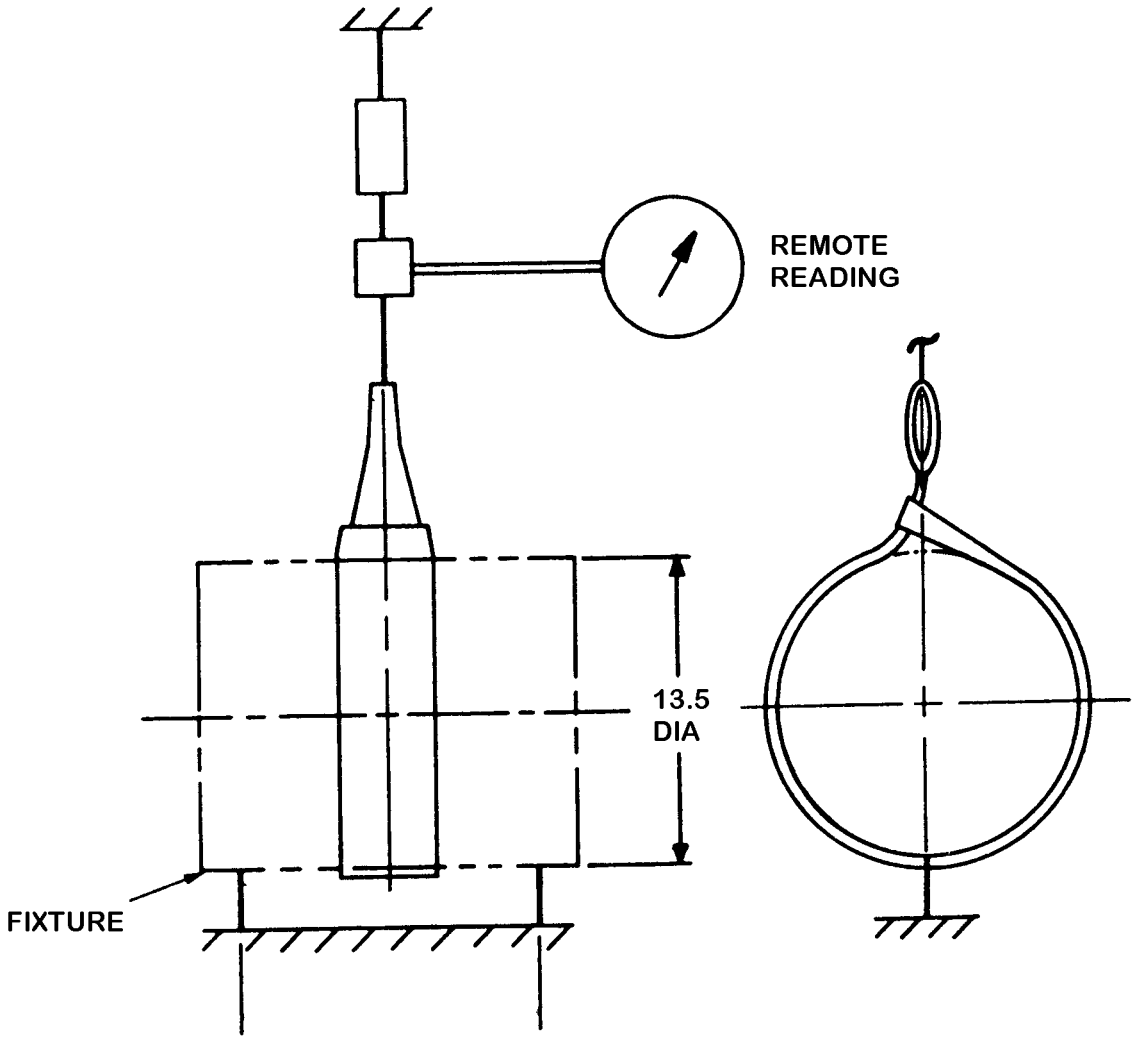

FIGURE 4-100. Test Arrangement, Sling, Mk 106 Mod 0

SLING,
MK 107 MOD 0
DL 2643781
NSN 1H 4925-00-403-8904

SWL	TEST LOAD	TEST DURATION
5,000 POUNDS	10,000 POUNDS	5 MINUTES

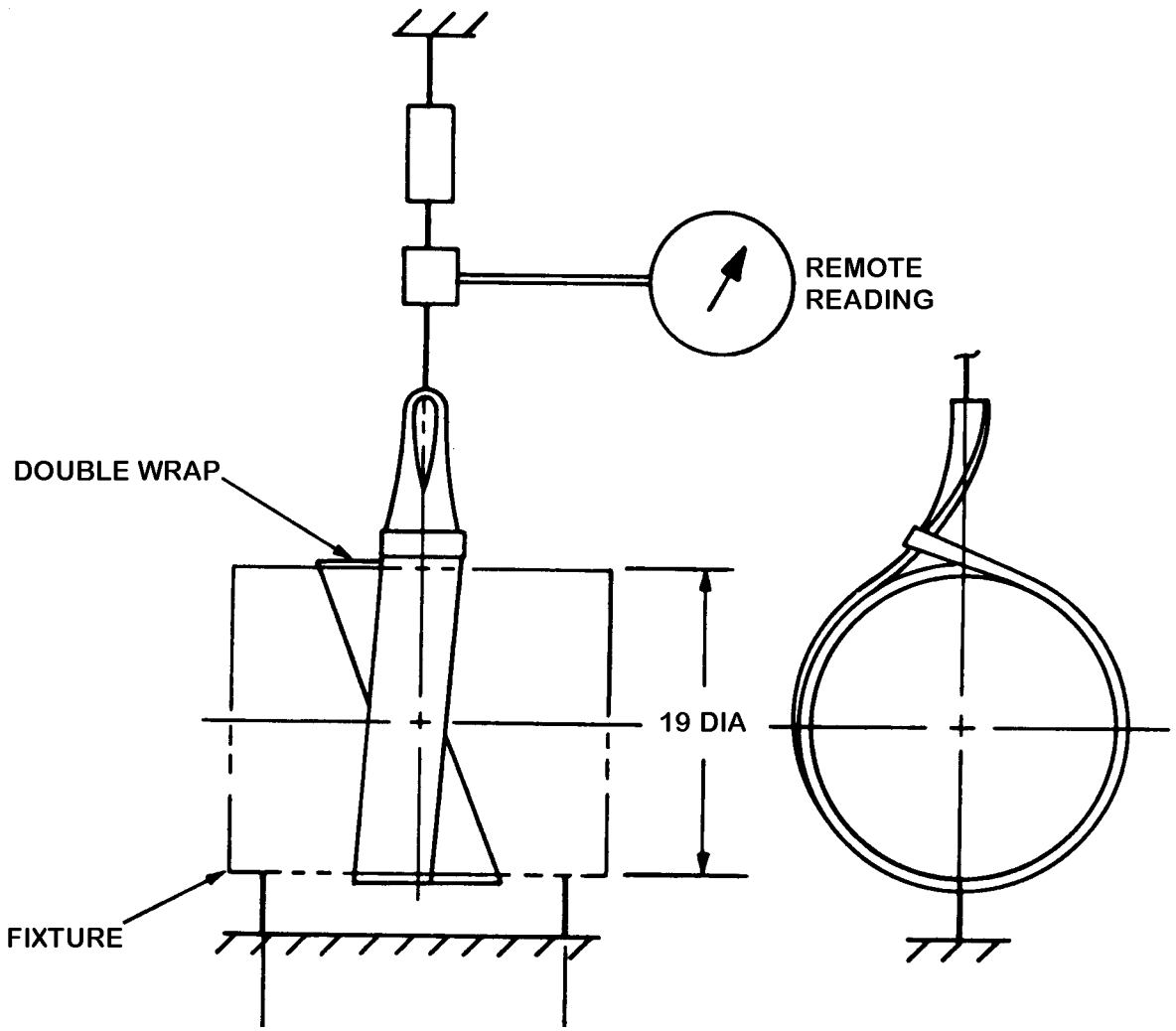

FIGURE 4-101. Test Arrangement, Sling, Mk 107 Mod 0

SLING,
MK 108 MOD 0
DL 2643838
NSN 9Z 5340-00-177-8086

SWL	TEST LOAD	TEST DURATION
200 POUNDS	240 POUNDS	2 MINUTES

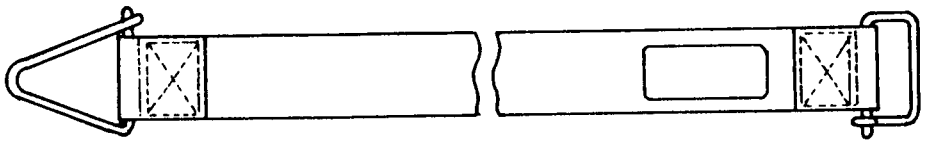

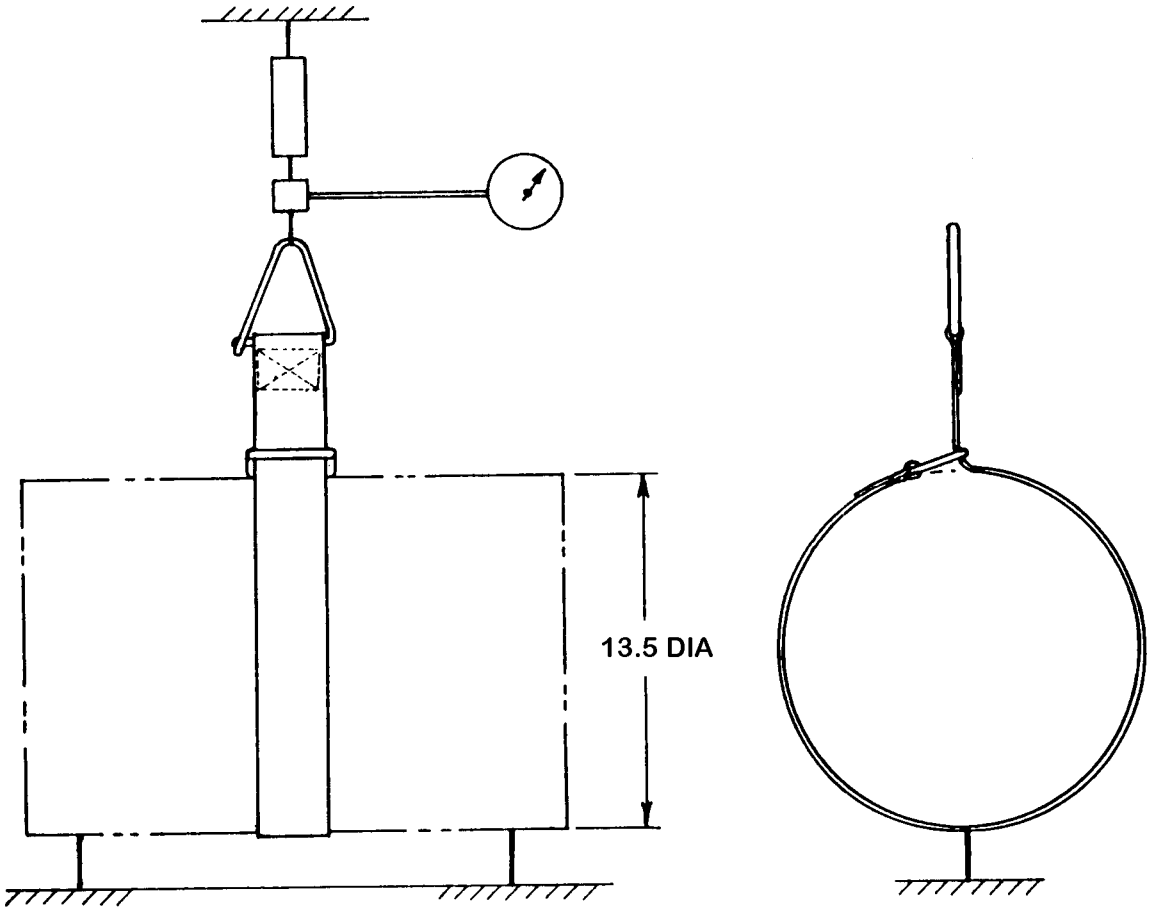

FIGURE 4-102. Test Arrangement, Sling, Mk 108 Mod 0

SLING, CONTAINER LIFTING,
MK 109 MOD 1
DL 5167555
NSN 3Z 3940-01-313-7149

SWL	TEST LOAD	TEST DURATION
5,000 POUNDS	10,000 POUNDS	2 MINUTES

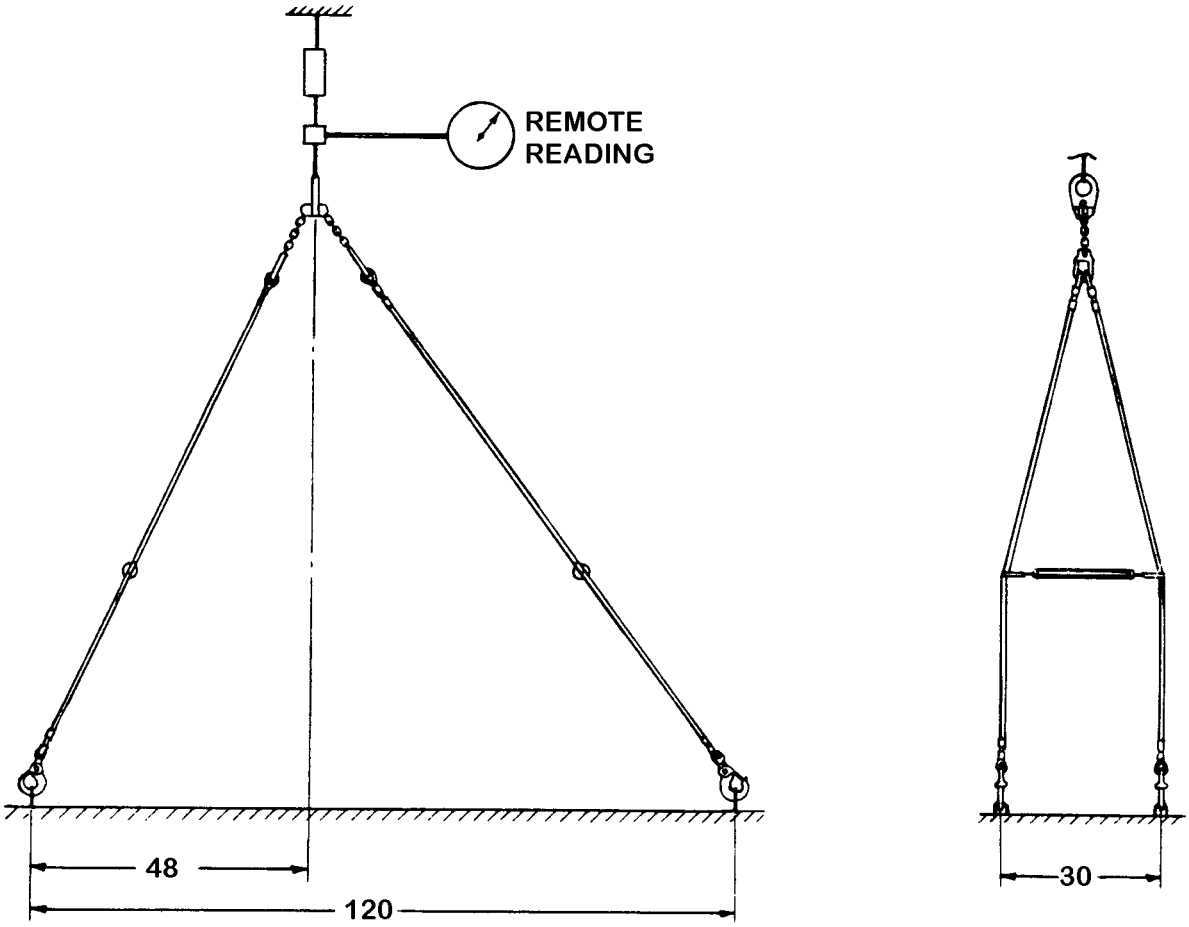

FIGURE 4-103. Test Arrangement, Container Lifting Sling, Mk 109 Mod 1

SLING,
MK 111 MOD 0
DL 2643792
NSN 9C 4921-00-940-8399

SWL	TEST LOAD	TEST DURATION
5,000 POUNDS	10,000 POUNDS	5 MINUTES

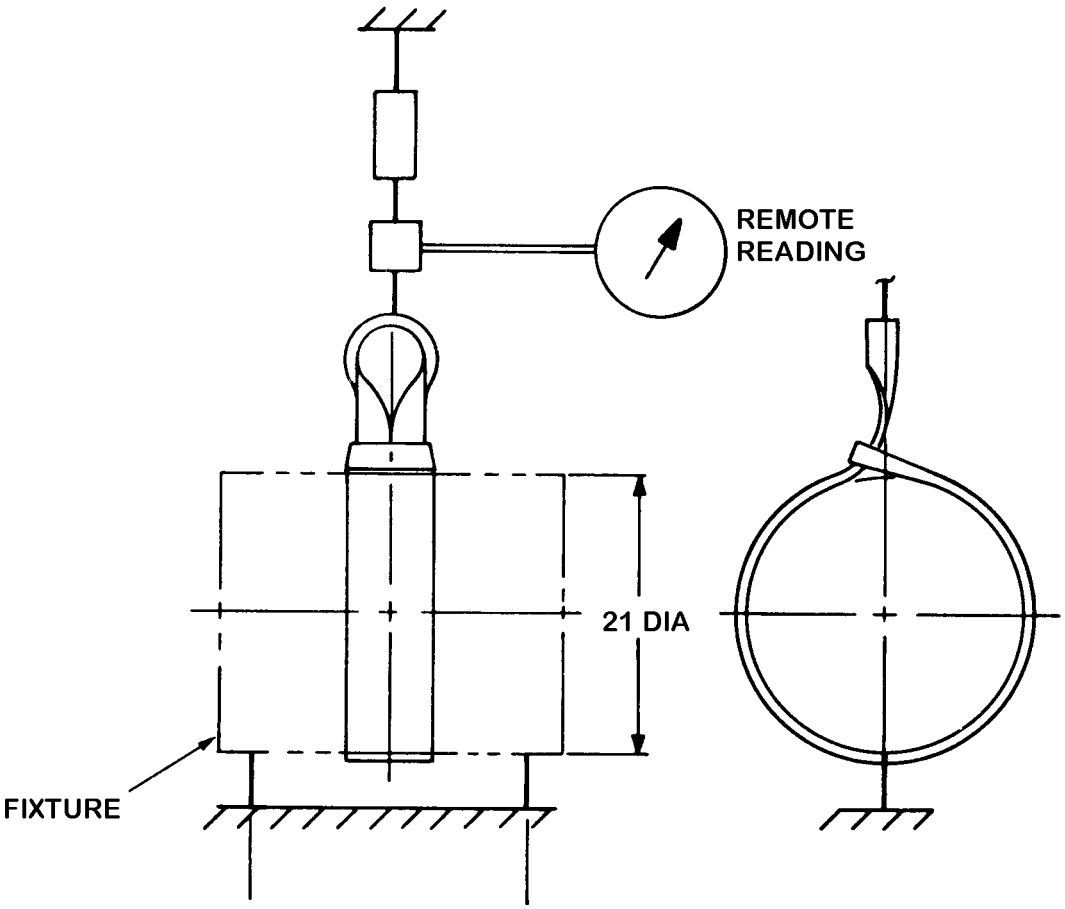

FIGURE 4-104. Test Arrangement, Sling, Mk 111 Mod 0

SLING,
MK 113 MOD 0
DL 1874082
NSN 1H 4921-00-941-8859

SWL	TEST LOAD	TEST DURATION
2,500 POUNDS	5,000 POUNDS	5 MINUTES

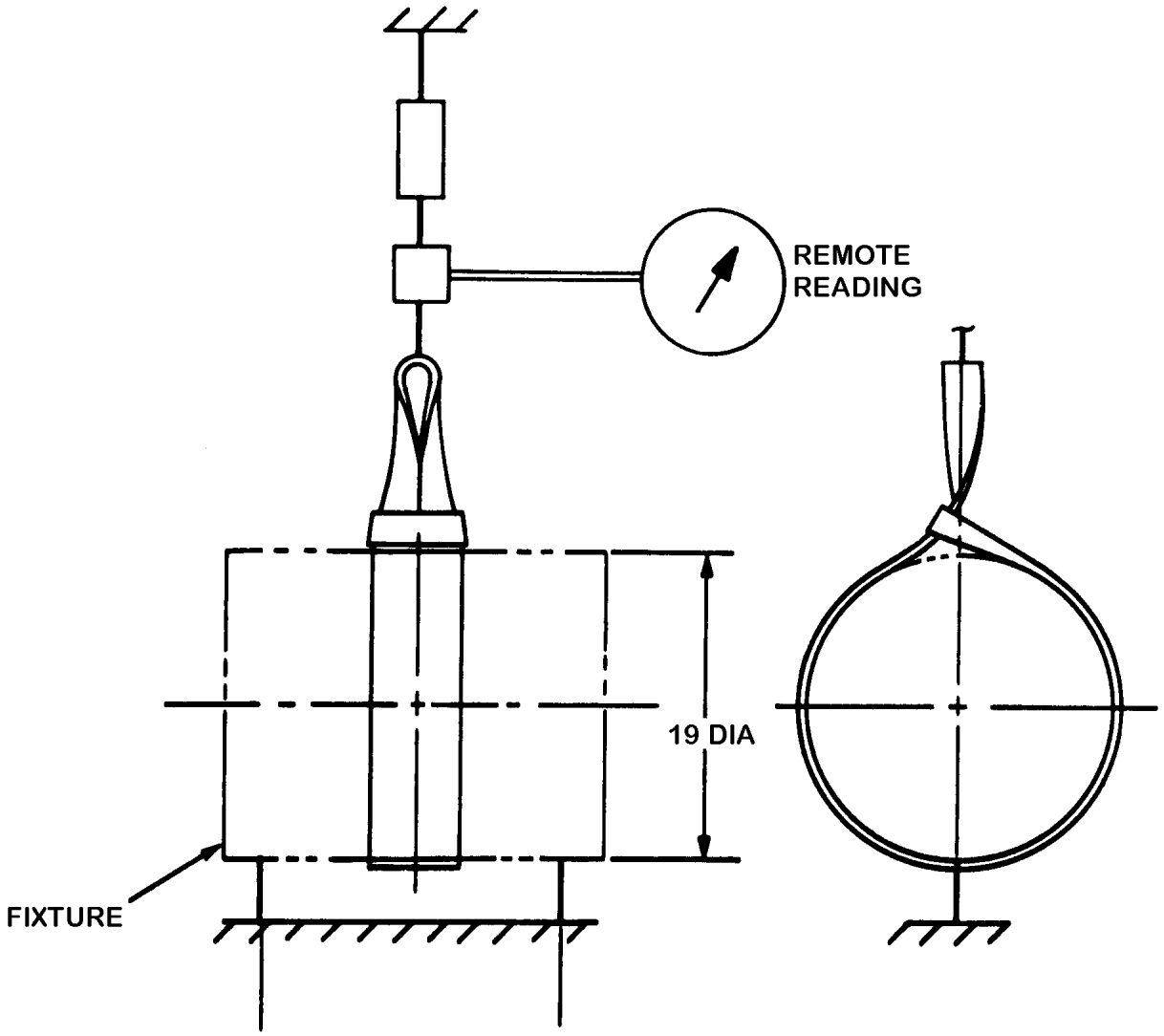

FIGURE 4-105. Test Arrangement, Sling, Mk 113 Mod 0

SLING,
MK 114 MOD 0
DL 2643810
NSN 1H 4921-00-940-8398

SWL	TEST LOAD	TEST DURATION
5,000 POUNDS	10,000 POUNDS	5 MINUTES

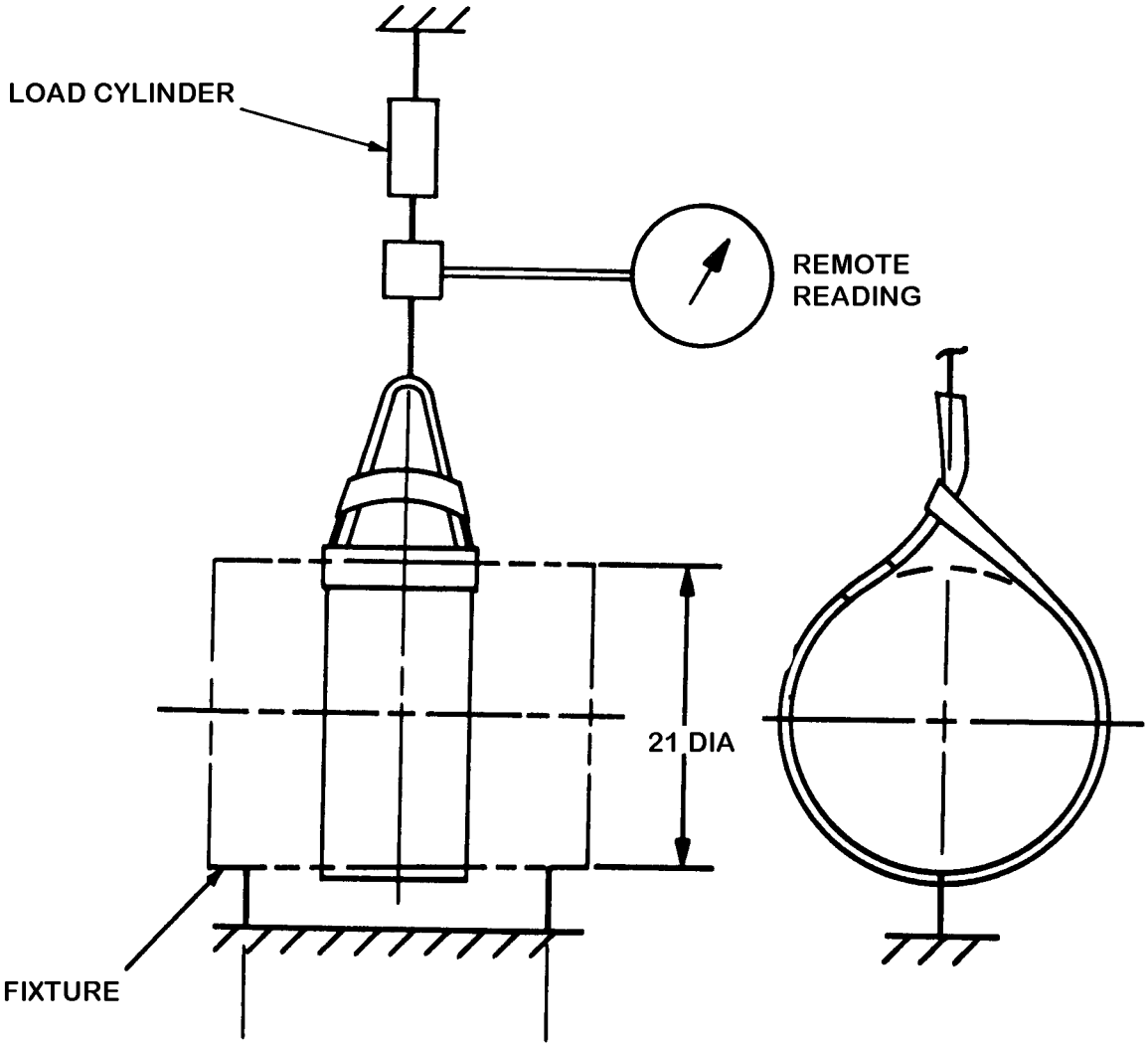

FIGURE 4-106. Test Arrangement, Sling, Mk 114 Mod 0

SLING, WEAPONS HANDLING,
MK 115 MOD 0
DL 3014507
NSN 6T 1398-00-432-3222

SWL	TEST LOAD	TEST DURATION
2,500 POUNDS	5,000 POUNDS	2 MINUTES

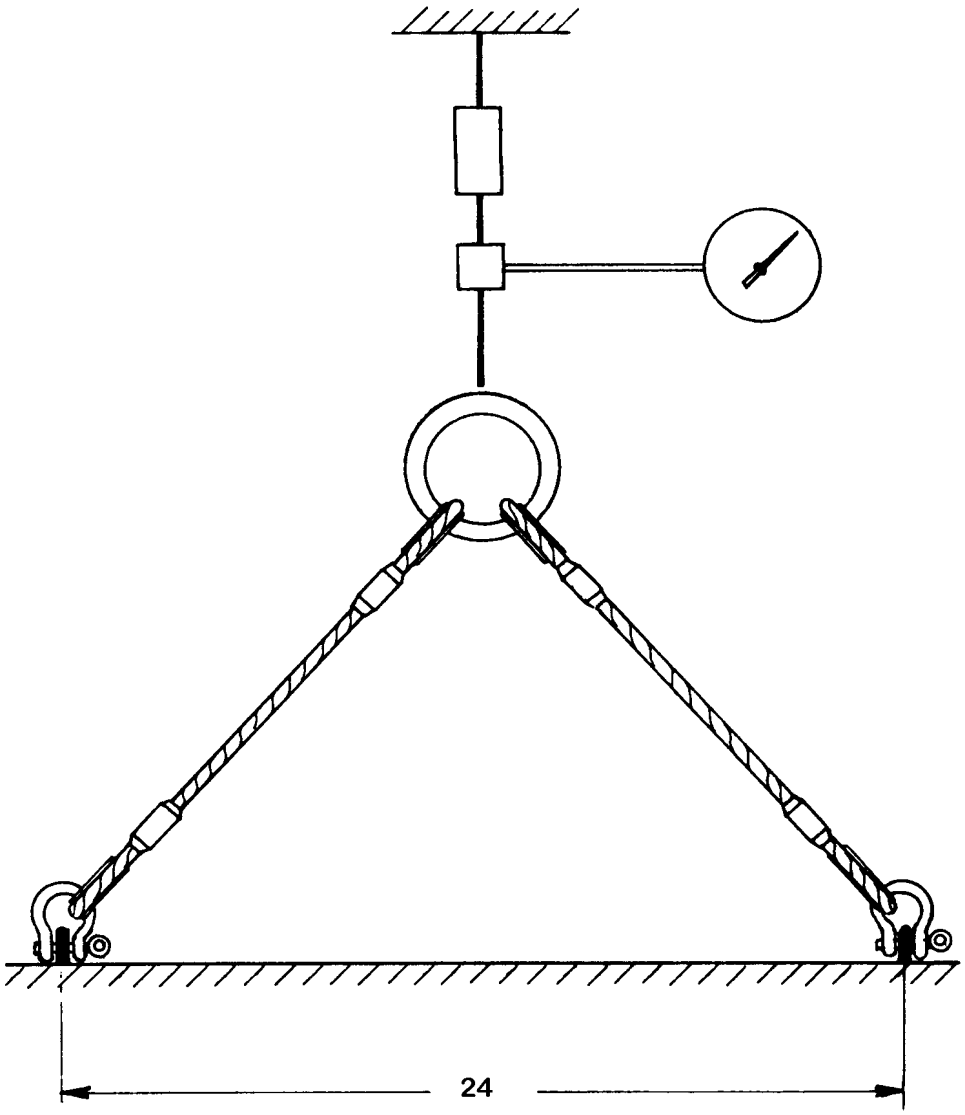

FIGURE 4-107. Test Arrangement, Weapons Handling Sling, Mk 115 Mod 0

SLING, CONTAINER
MK 116 MOD 0
DL 2644528
NSN 8A 1450-00-836-1306

SWL	TEST LOAD	TEST DURATION
5,000 POUNDS	10,000 POUNDS	2 MINUTES

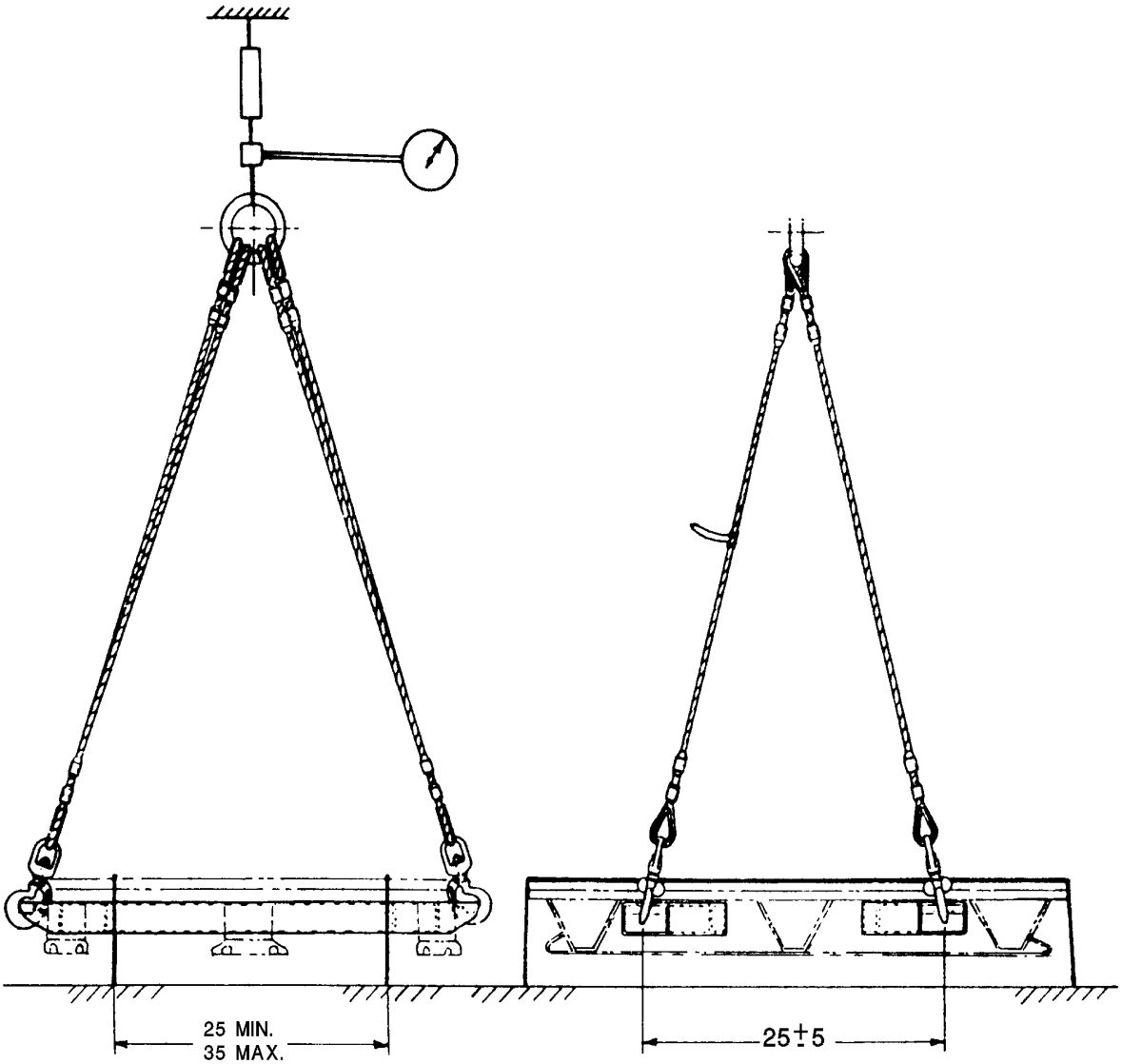

FIGURE 4-108. Tests Arrangement, Container Sling, Mk 116 Mod 0

SLING,
MK 117 MOD 0
DL 2644585
NSN 1H 1450-00-836-1313

SWL	TEST LOAD	TEST DURATION
900 POUNDS	1,800 POUNDS	2 MINUTES

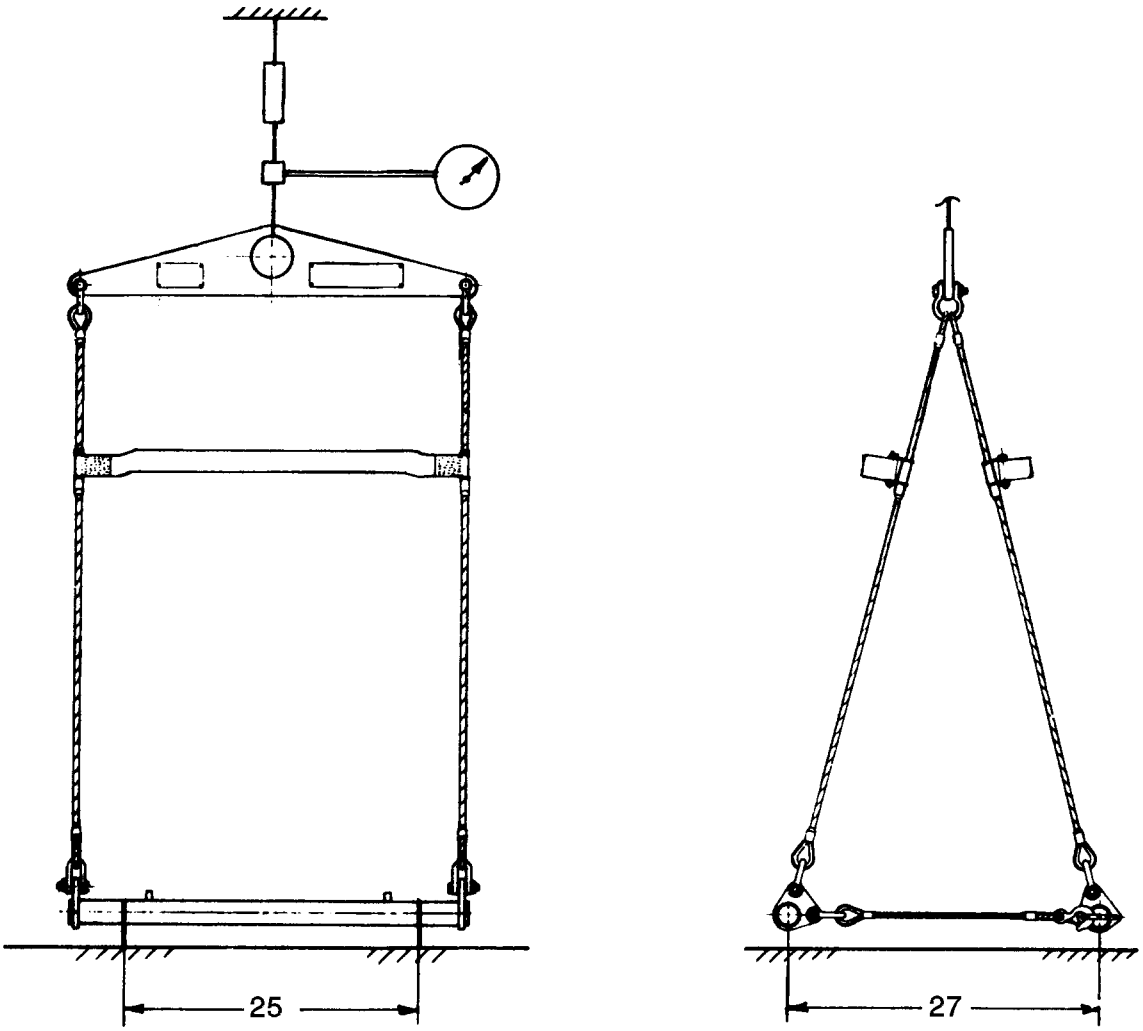

FIGURE 4-109. Test Arrangement, Sling, Mk 117 Mod 0

SLING,
MK 118 MOD 0
DWG 2470110
NSN TO BE ASSIGNED

SWL	TEST LOAD	TEST DURATION
4,000 POUNDS	8,000 POUNDS	5 MINUTES

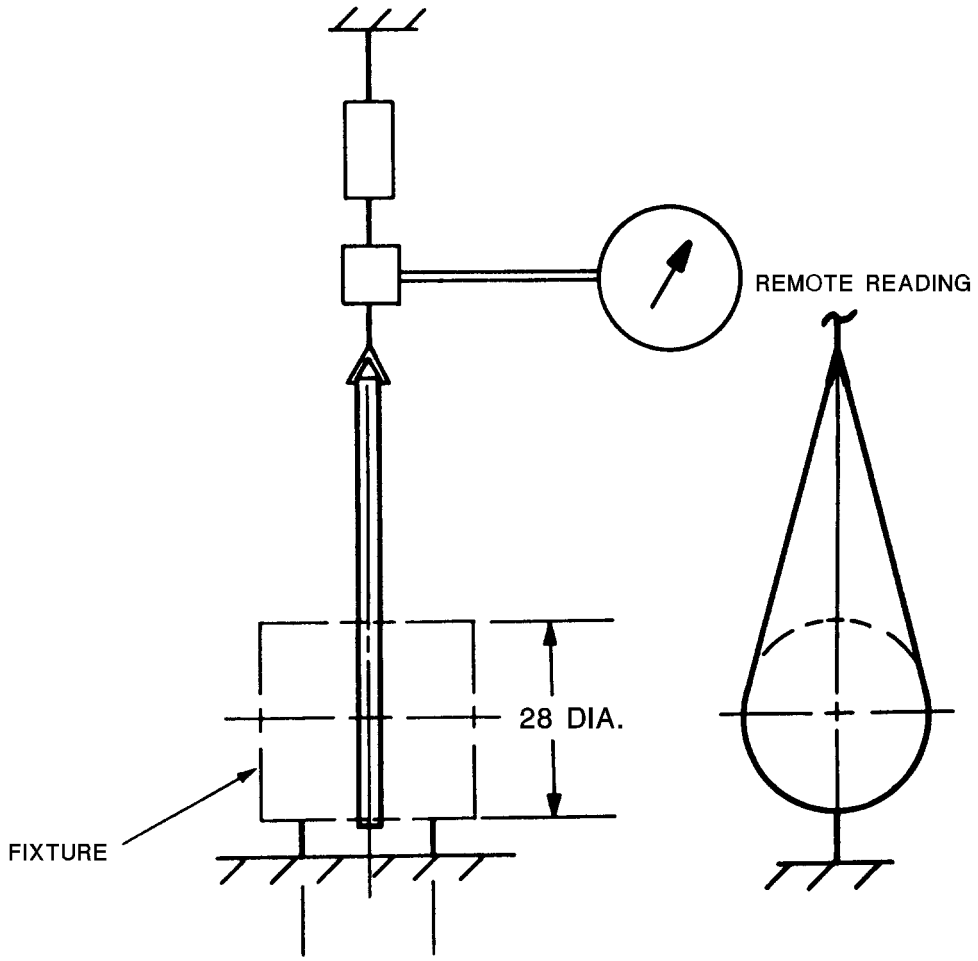

FIGURE 4-110. Test Arrangement, Sling, Mk 118 Mod 0

SLING,
MK 121 MOD 0
DL 2483352
NSN 1H 1450-00-436-1725

SWL	TEST LOAD	TEST DURATION
2,400 POUNDS	4,800 POUNDS	2 MINUTES

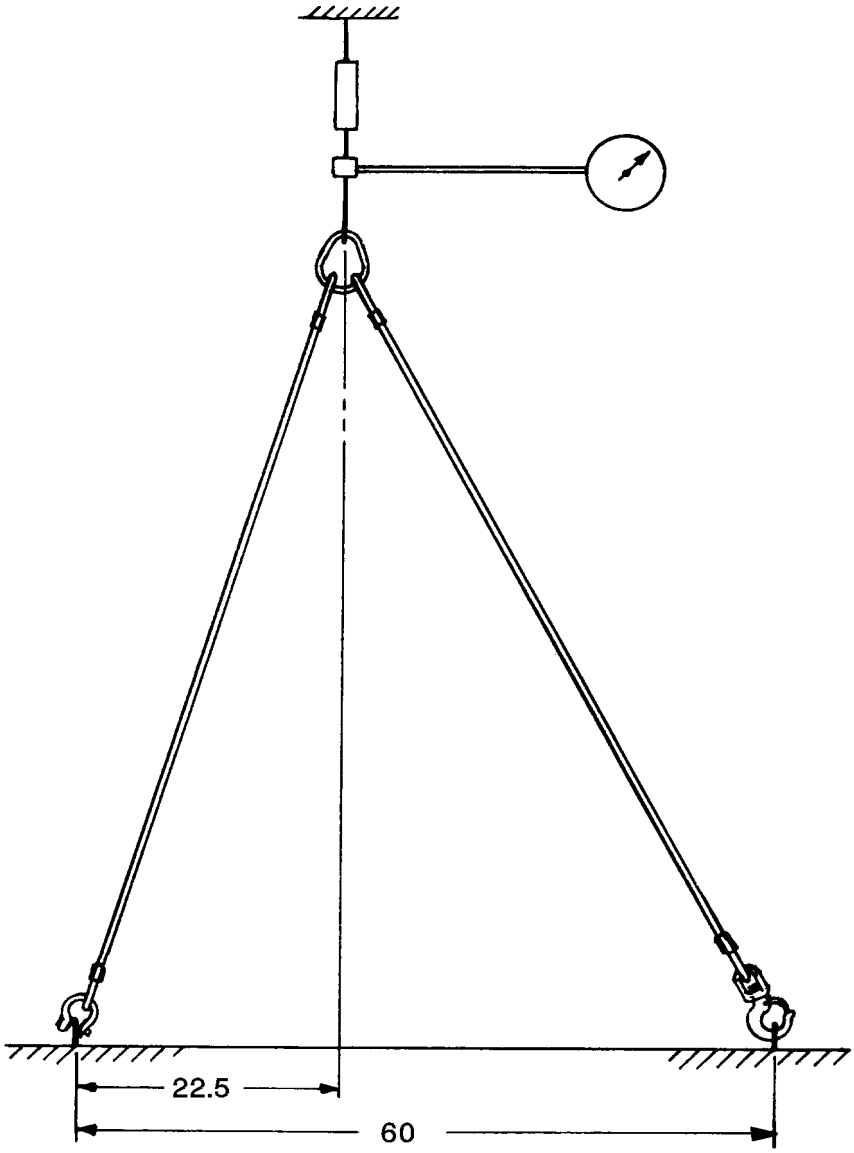

FIGURE 4-111. Test Arrangement, Sling, Mk 121 Mod 0

SLING, PALLET,
MK 123 MOD 0
DL 2645180
NSN 1H 1450-01-077-5639

SWL	TEST LOAD	TEST DURATION
6,000 POUNDS	12,000 POUNDS	2 MINUTES

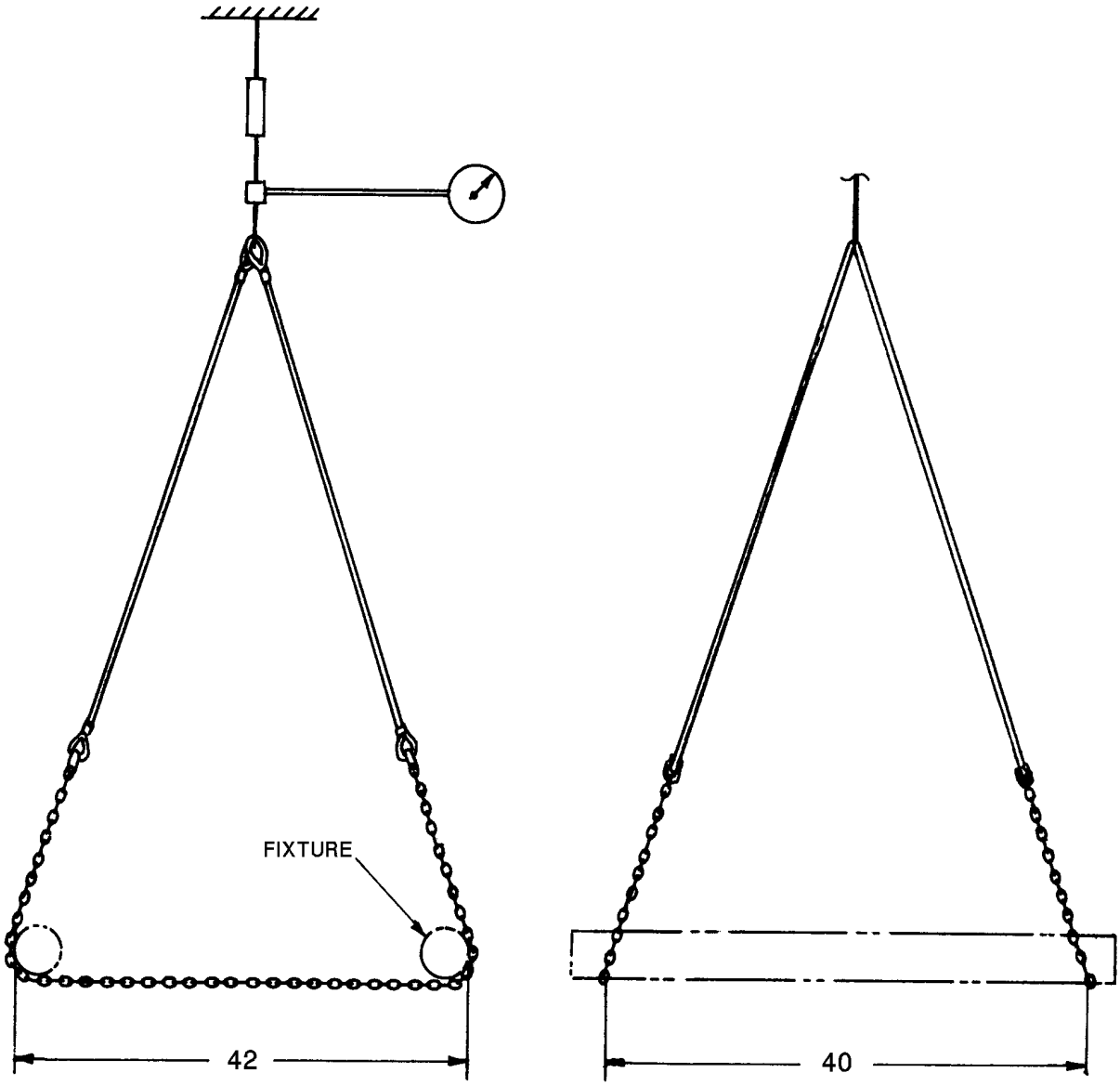

FIGURE 4-112. Test Arrangement, Pallet Sling, Mk 123 Mod 0

SLING, HOISTING,
MK 126 MOD 0
DL 2645301
NSN 1H 1450-01-073-6520

SWL	TEST LOAD	TEST DURATION
1,500 POUNDS	3,000 POUNDS	2 MINUTES

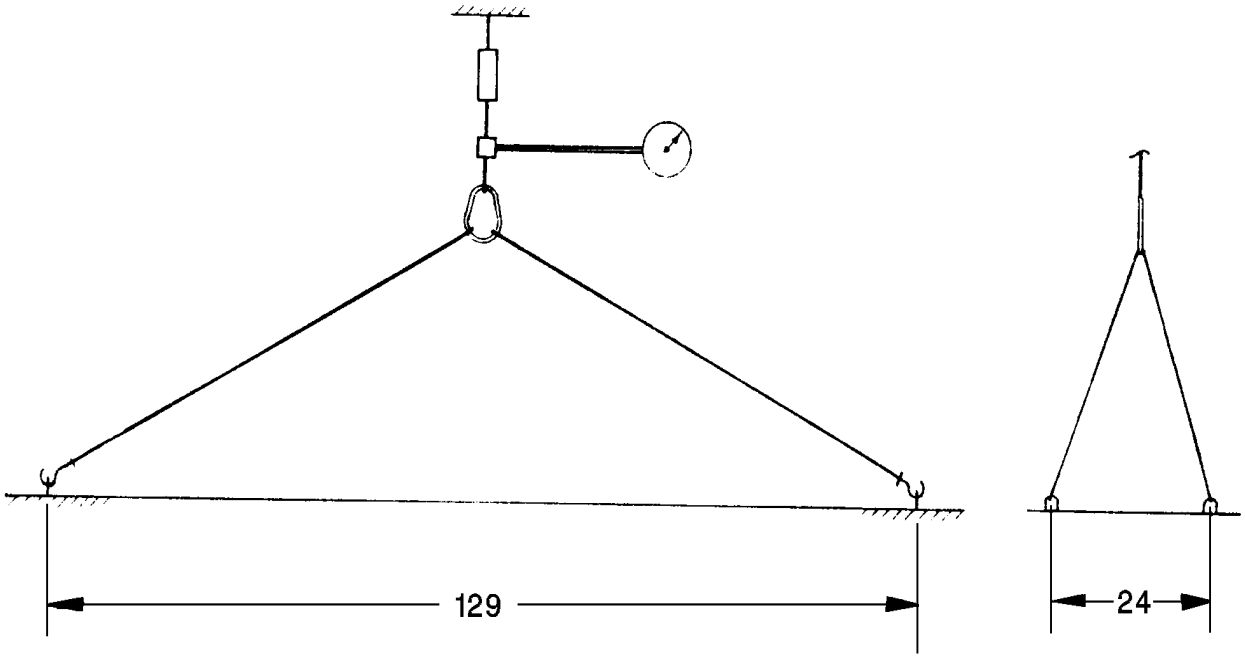

FIGURE 4-113. Test Arrangement, Hoisting Sling, Mk 126 Mod 0

SLING,
MK 127 MOD 0
P/N 2878413
NSN 6T 4923-01-046-3506

SWL	TEST LOAD	TEST DURATION
1,000 POUNDS	2,000 POUNDS	2 MINUTES

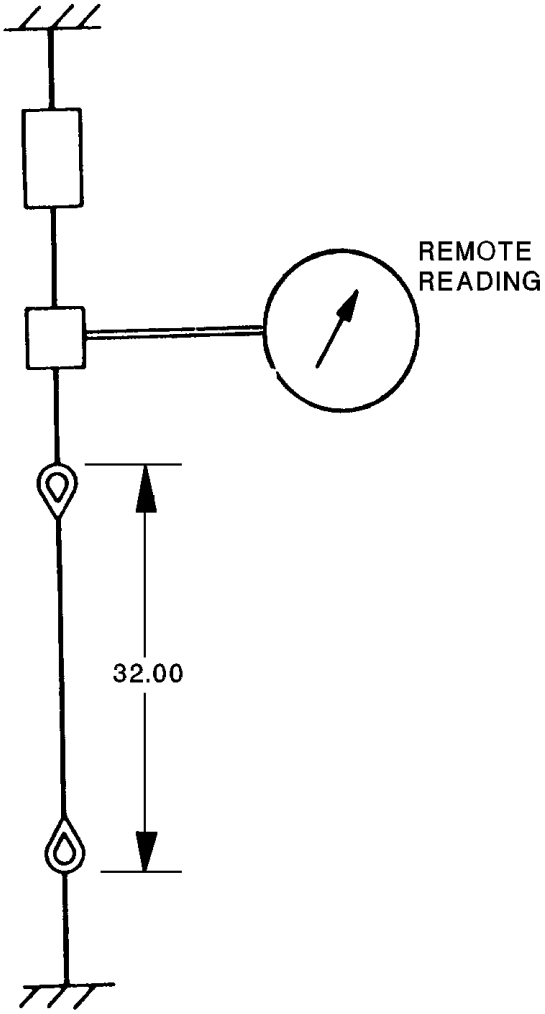

FIGURE 4-114. Test Arrangement, Sling, Mk 127 Mod 0

PENDANT FOR SLING, HOISTING,
MK 128 MOD 0
DL 5166422
NSN 1H 4921-01-076-1236

SWL	TEST LOAD	TEST DURATION
4,000 POUNDS	8,000 POUNDS	5 MINUTES

NOTE

Test legs in pairs as shown in figure 4-99.

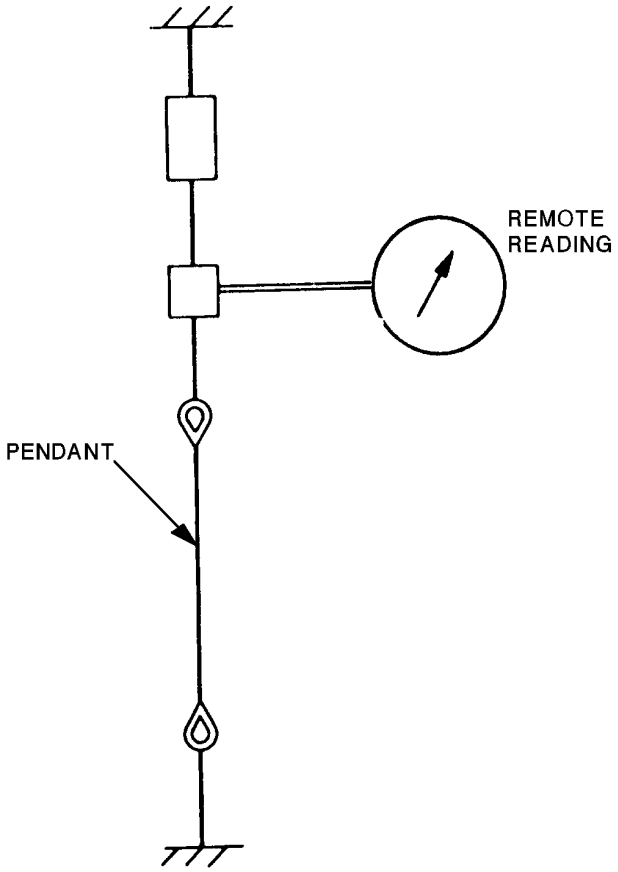

FIGURE 4-115. Test Arrangement, Pendant for Hoisting Sling, Mk 128 Mod 0

SLING, HOISTING CLAMP FRAME ASSEMBLY,
MK 129 MOD 0
DL 5166414
NSN 1H 4921-01-090-8213

SWL	TEST LOAD	TEST DURATION
300 POUNDS	600 POUNDS	2 MINUTES

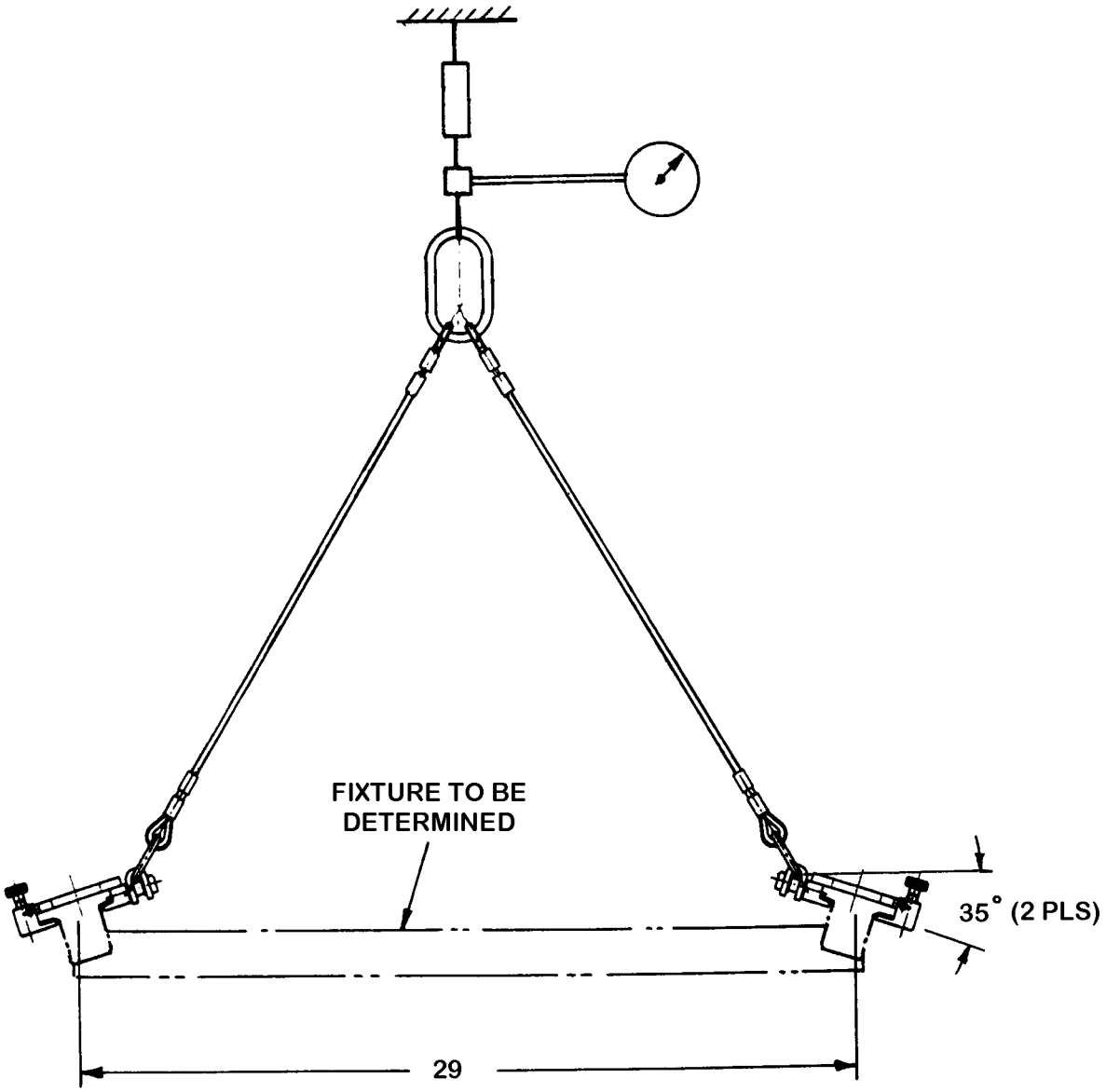

FIGURE 4-116. Test Arrangement, Hoisting Clamp Frame Assembly Sling, Mk 129 Mod 0

SLING, PALLET,
MK 130 MOD 1
DL 5167661
NSN 1H 4010-01-373-9252

SWL	TEST LOAD	TEST DURATION
8,000 POUNDS	16,000 POUNDS	2 MINUTES

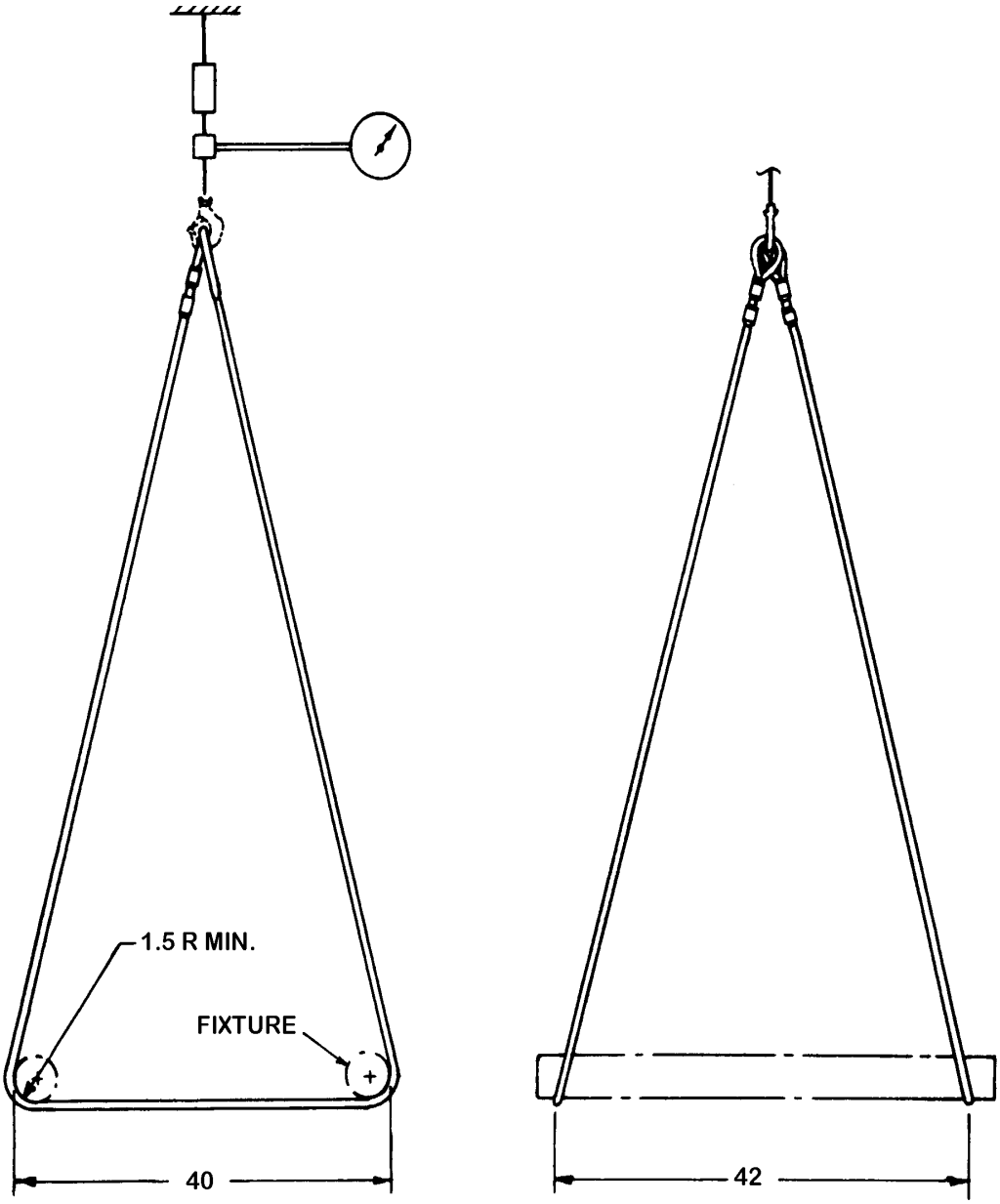

FIGURE 4-117. Test Arrangement, Pallet Sling, Mk 130 Mod 1

SLING, PALLET,
MK 131 MOD 1
DL 5167662
NSN 1H 4010-01-373-9253

SWL	TEST LOAD	TEST DURATION
8,000 POUNDS	16,000 POUNDS	2 MINUTES

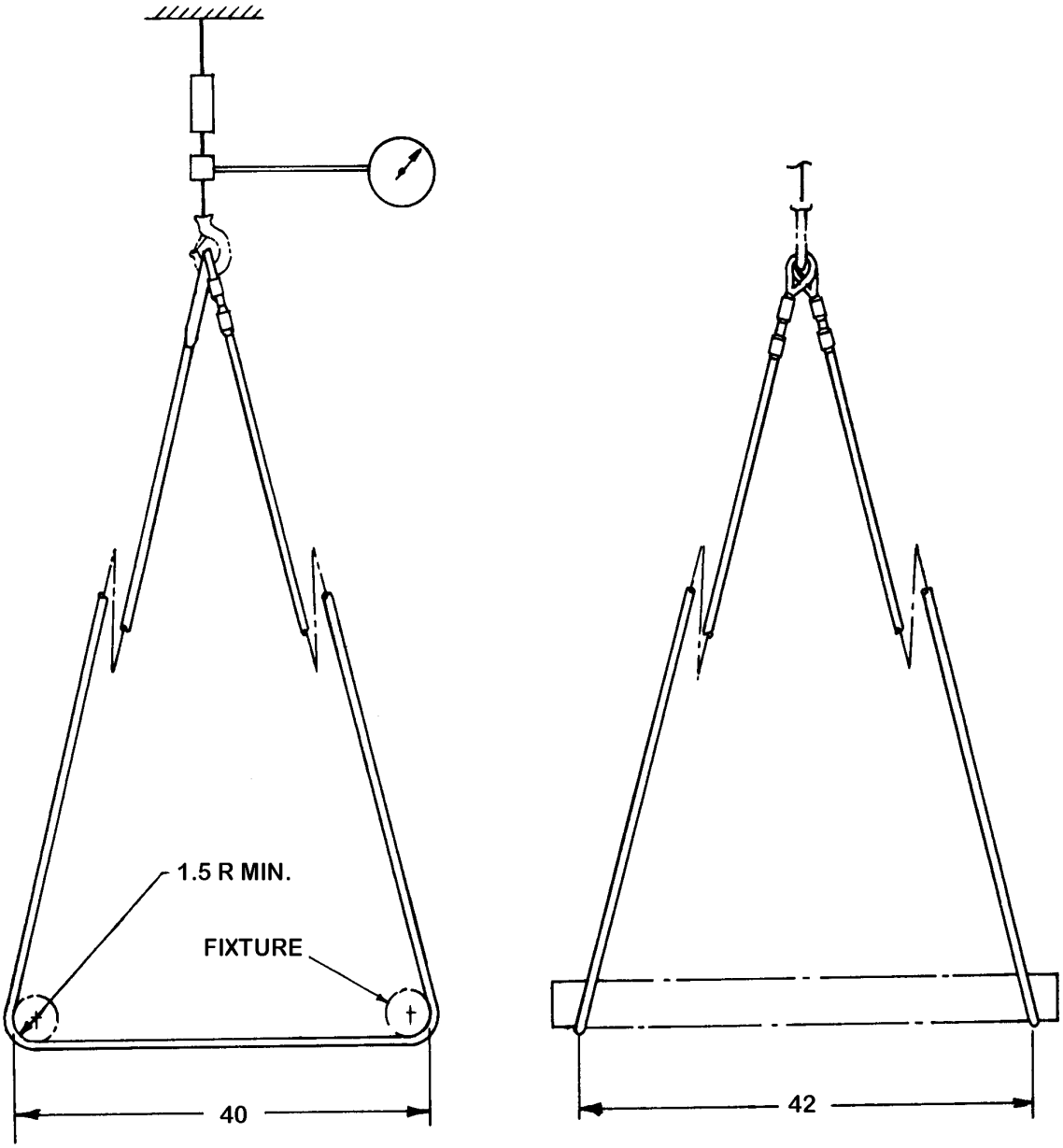

FIGURE 4-118. Test Arrangement, Pallet Sling, Mk 131 Mod 1

SLING, PALLET,
MK 132 MOD 1
DL 5167663
NSN 1H 4010-01-373-9254

SWL	TEST LOAD	TEST DURATION
8,000 POUNDS	16,000 POUNDS	2 MINUTES

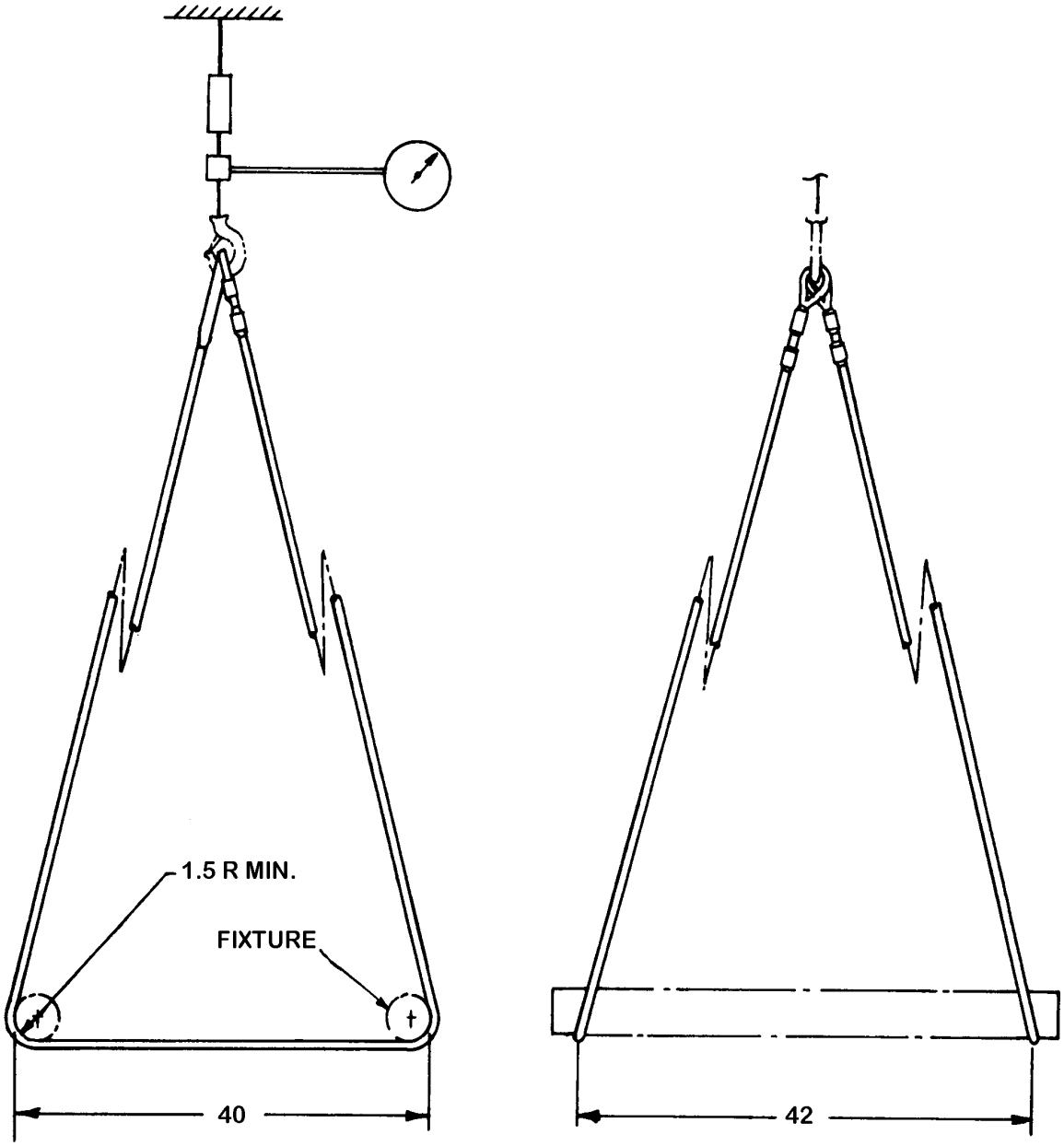

FIGURE 4-119. Test Arrangement, Pallet Sling, Mk 132 Mod 1

SLING, DOUBLE PALLET,
MK 133 MOD 1
DL 5167664
NSN 1H 4010-01-373-9255

SWL	TEST LOAD	TEST DURATION
8,000 POUNDS	16,000 POUNDS	2 MINUTES

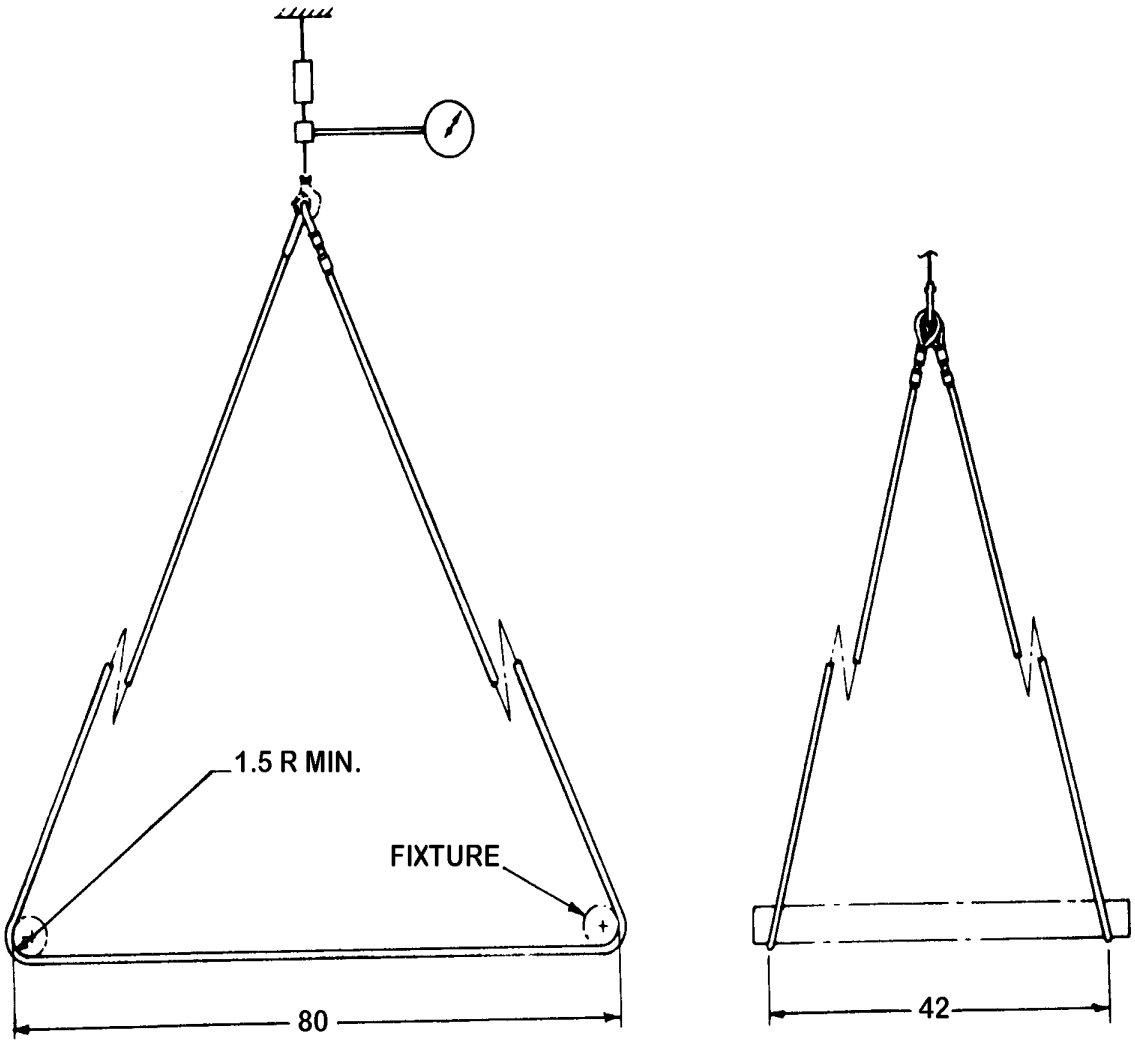

FIGURE 4-120. Test Arrangement, Double Pallet Sling, Mk 133 Mod 1

SLING, DOUBLE PALLET,
MK 134 MOD 1
DL 5167665
NSN 1H 4010-01-373-9256

SWL	TEST LOAD	TEST DURATION
8,000 POUNDS	16,000 POUNDS	2 MINUTES

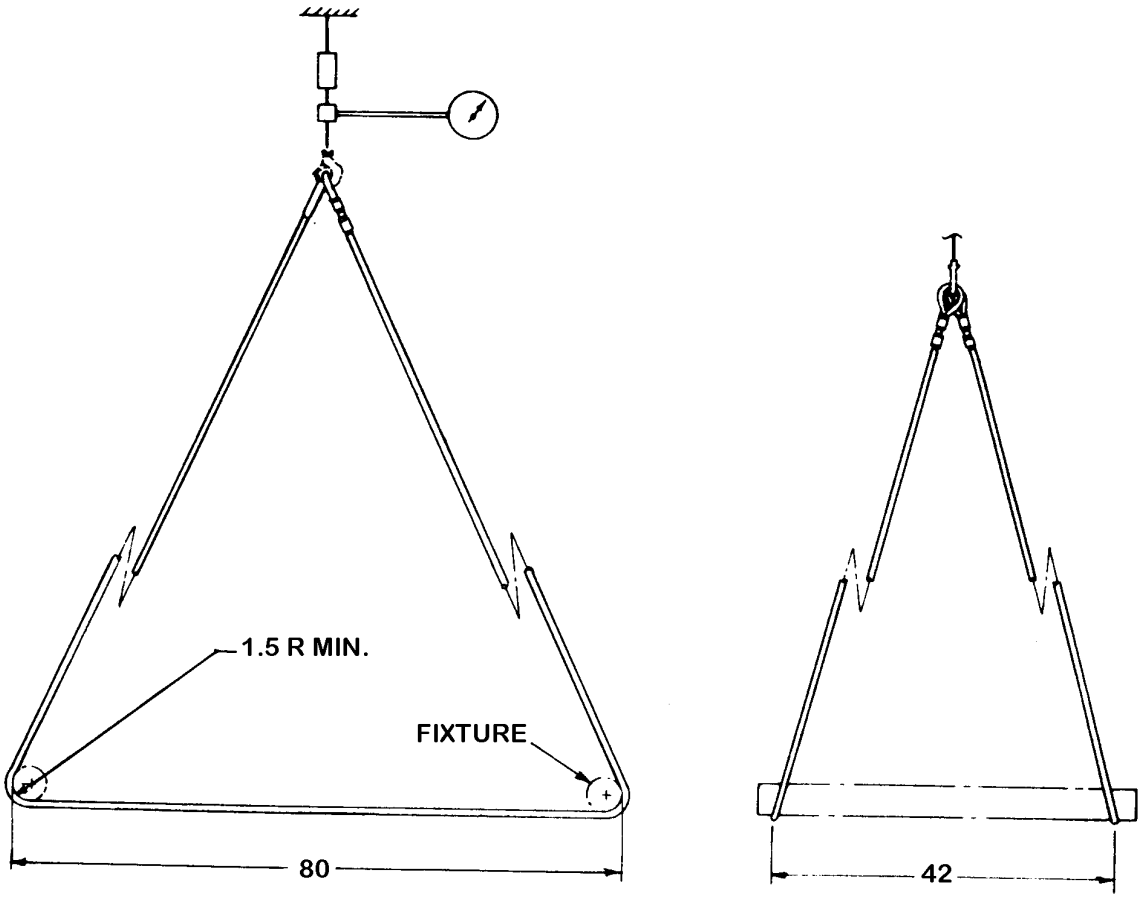

FIGURE 4-121. Test Arrangement, Double Pallet Sling, Mk 134 Mod 1

SLING,
MK 136 MOD 0
DL 3262287
NSN TO BE ASSIGNED

SWL	TEST LOAD	TEST DURATION
1,900 POUNDS	3,800 POUNDS	5 MINUTES

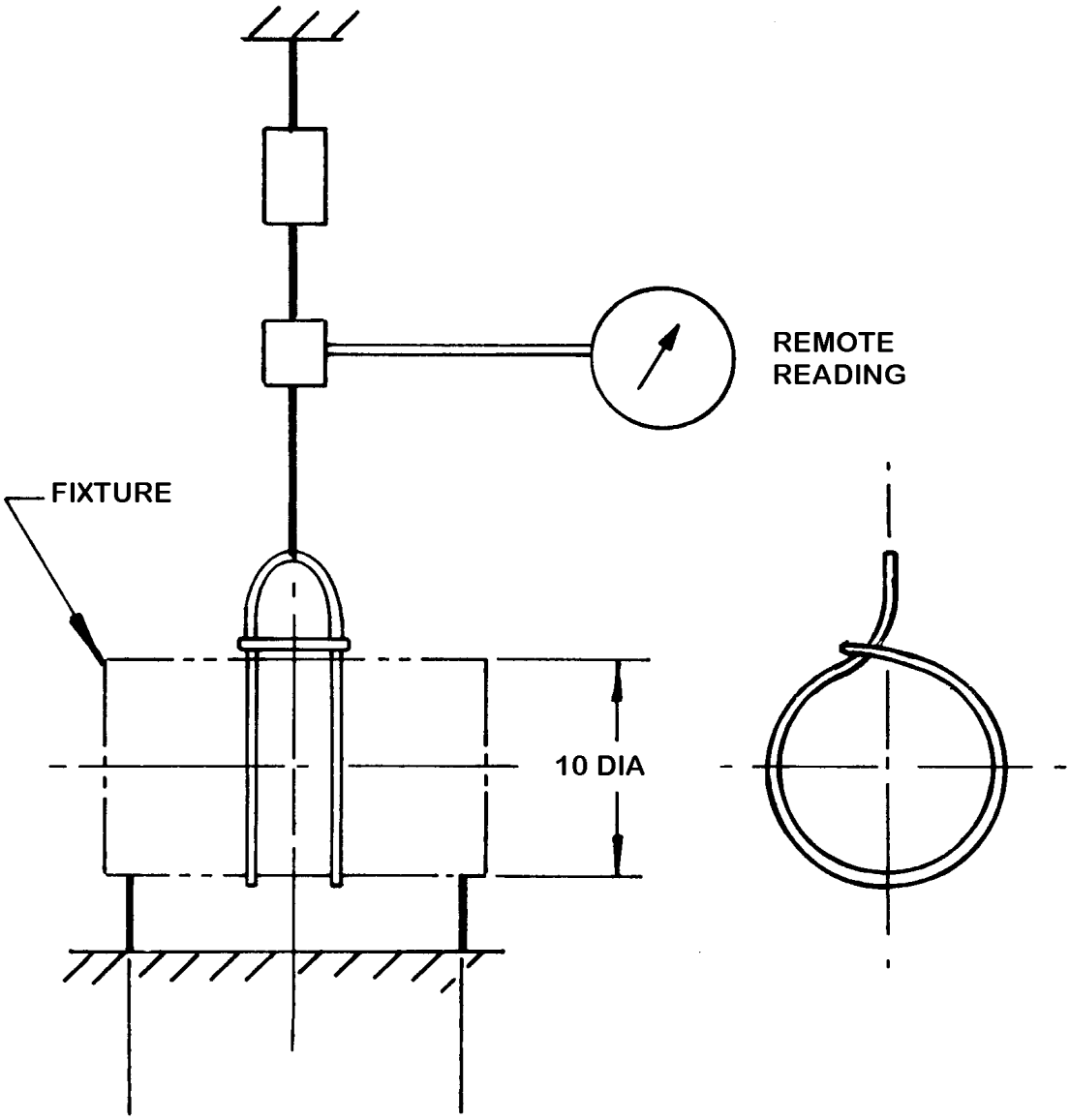

FIGURE 4-122. Test Arrangement, Sling, Mk 136 Mod 0

SLING,
MK 137 MOD 0
DL 3262106
NSN 9Z 3940-01-097-5308

SWL	TEST LOAD	TEST DURATION
400 POUNDS	800 POUNDS	5 MINUTES

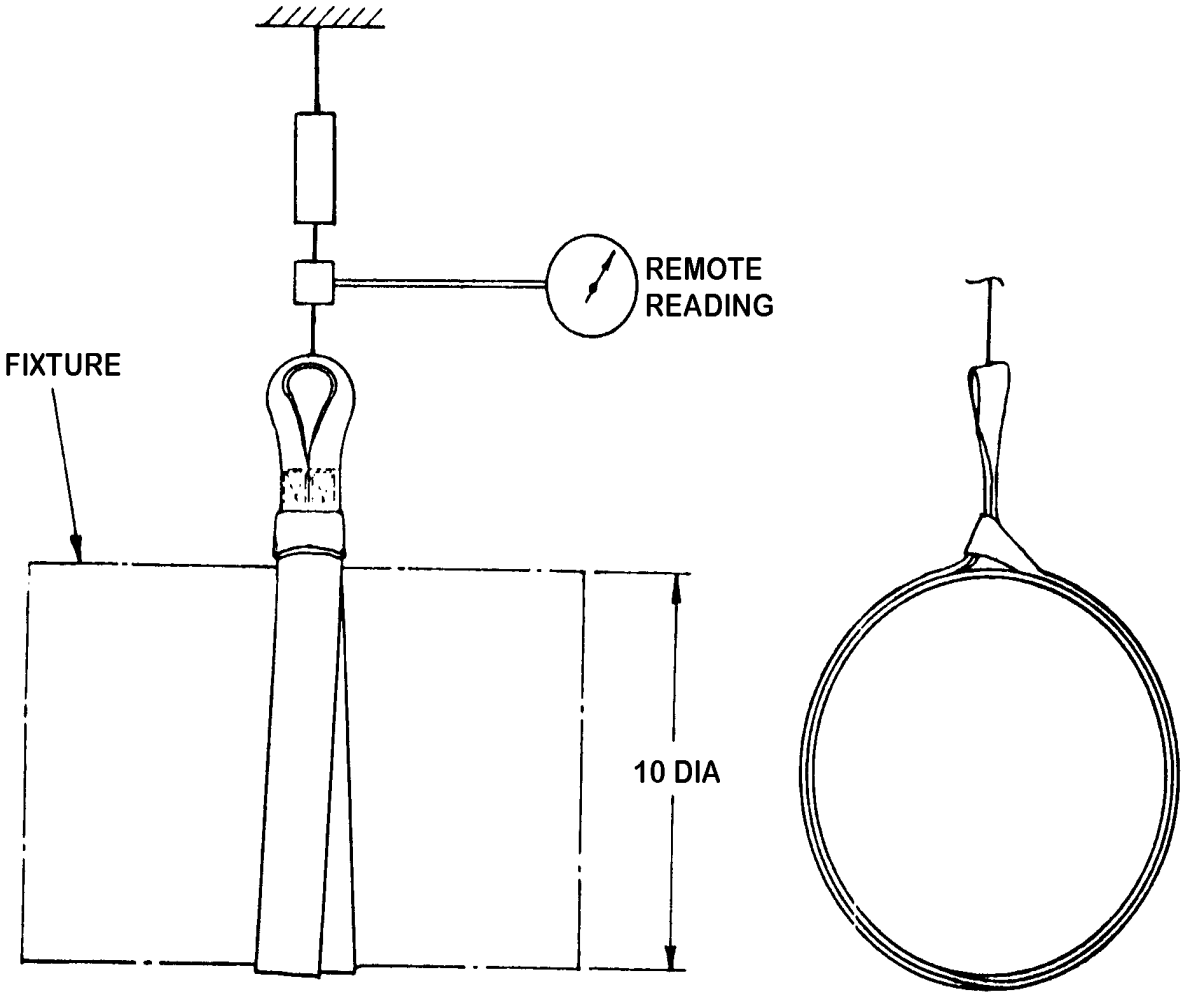

FIGURE 4-123. Test Arrangement, Sling, Mk 137 Mod 0

SLING,
MK 138 MOD 0
DL 5166741
NSN 1H 1055-01-170-1103

SWL	TEST LOAD	TEST DURATION
2,200 POUNDS	4,400 POUNDS	2 MINUTES

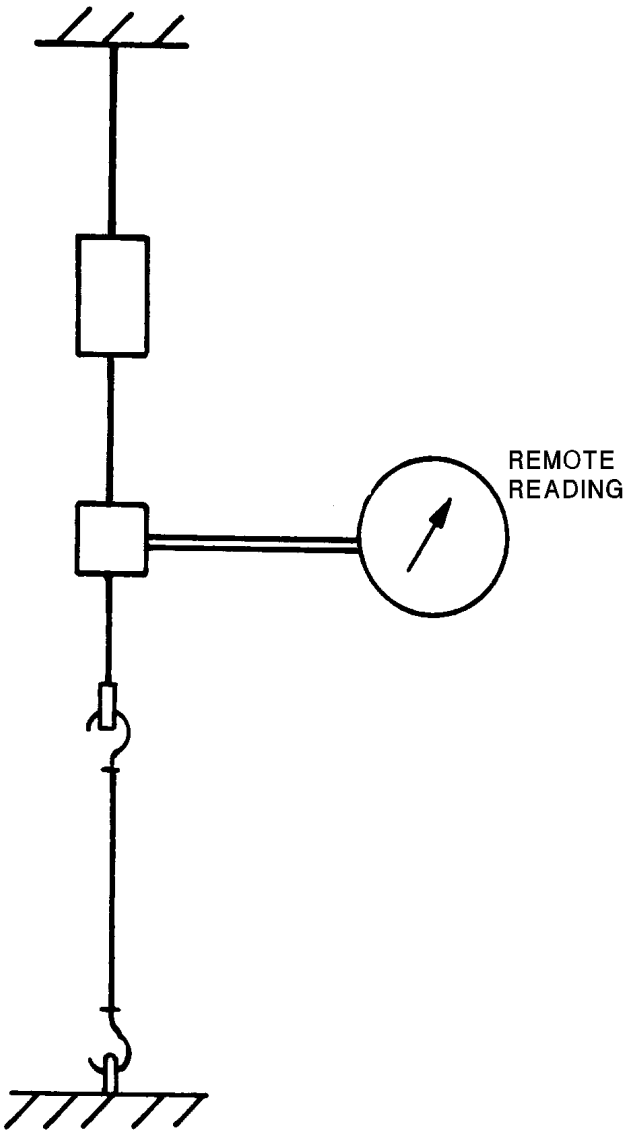

FIGURE 4-124. Test Arrangement, Sling, Mk 138 Mod 0

SLING, LIFT
MK 140 MOD 0
DL 5166782
NSN 9Z 3940-01-152-1330

SWL	TEST LOAD	TEST DURATION
275 POUNDS	550 POUNDS	2 MINUTES

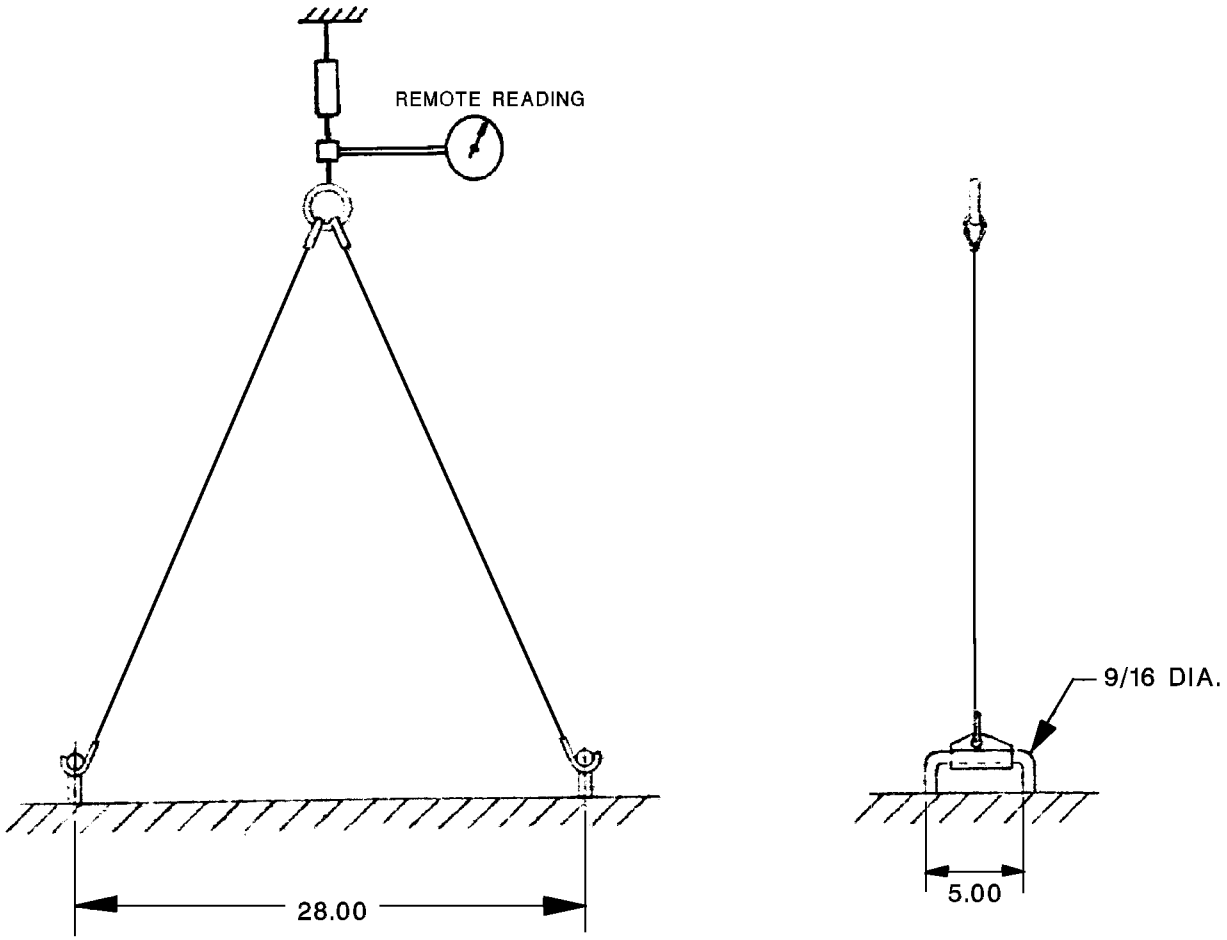

FIGURE 4-125. Test Arrangement, Lift Sling, Mk 140 Mod 0

SLING, BATTERY
MK 141 MOD 0
DL 5166853
NSN 1H 3940-01-368-2280

SWL	TEST LOAD	TEST DURATION
3,000 POUNDS	6,000 POUNDS	2 MINUTES

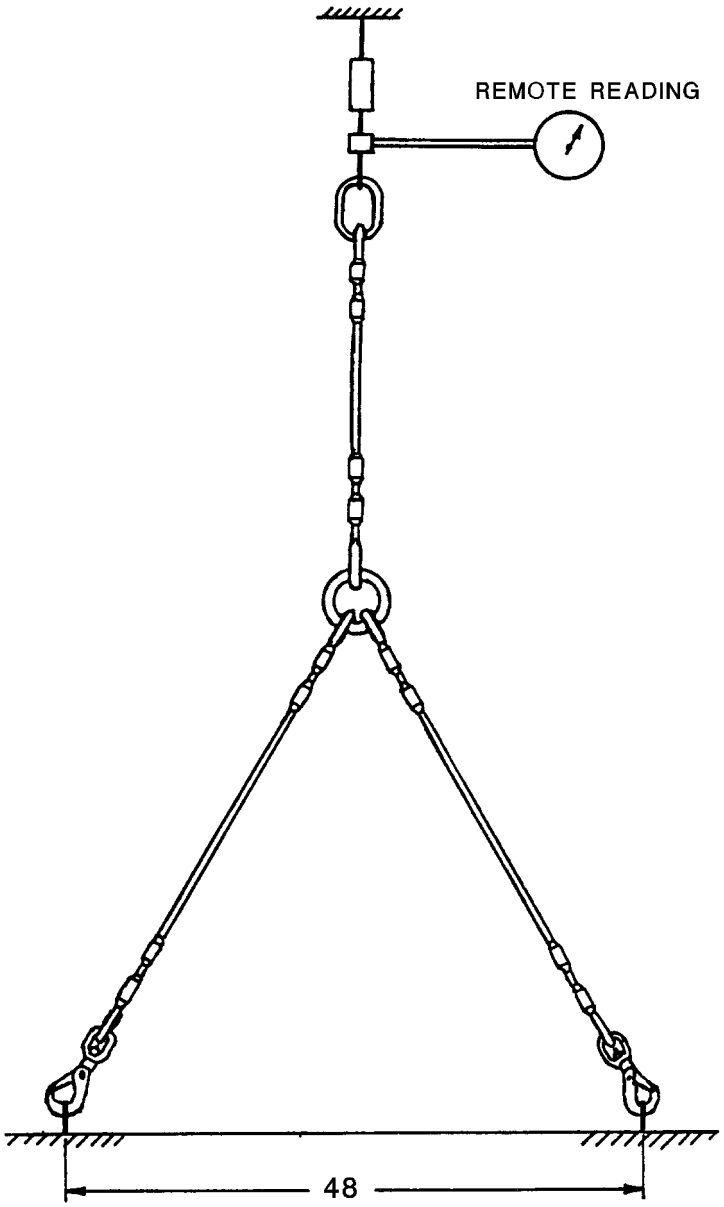

FIGURE 4-126. Test Arrangement, Battery Sling, Mk 141 Mod 0

SLING, FORKLIFT TRUCK
MK 142 MOD 0
DL 5166852
NSN 3Z 3940-01-368-2279

SWL	TEST LOAD	TEST DURATION
15,000 POUNDS	30,000 POUNDS	2 MINUTES

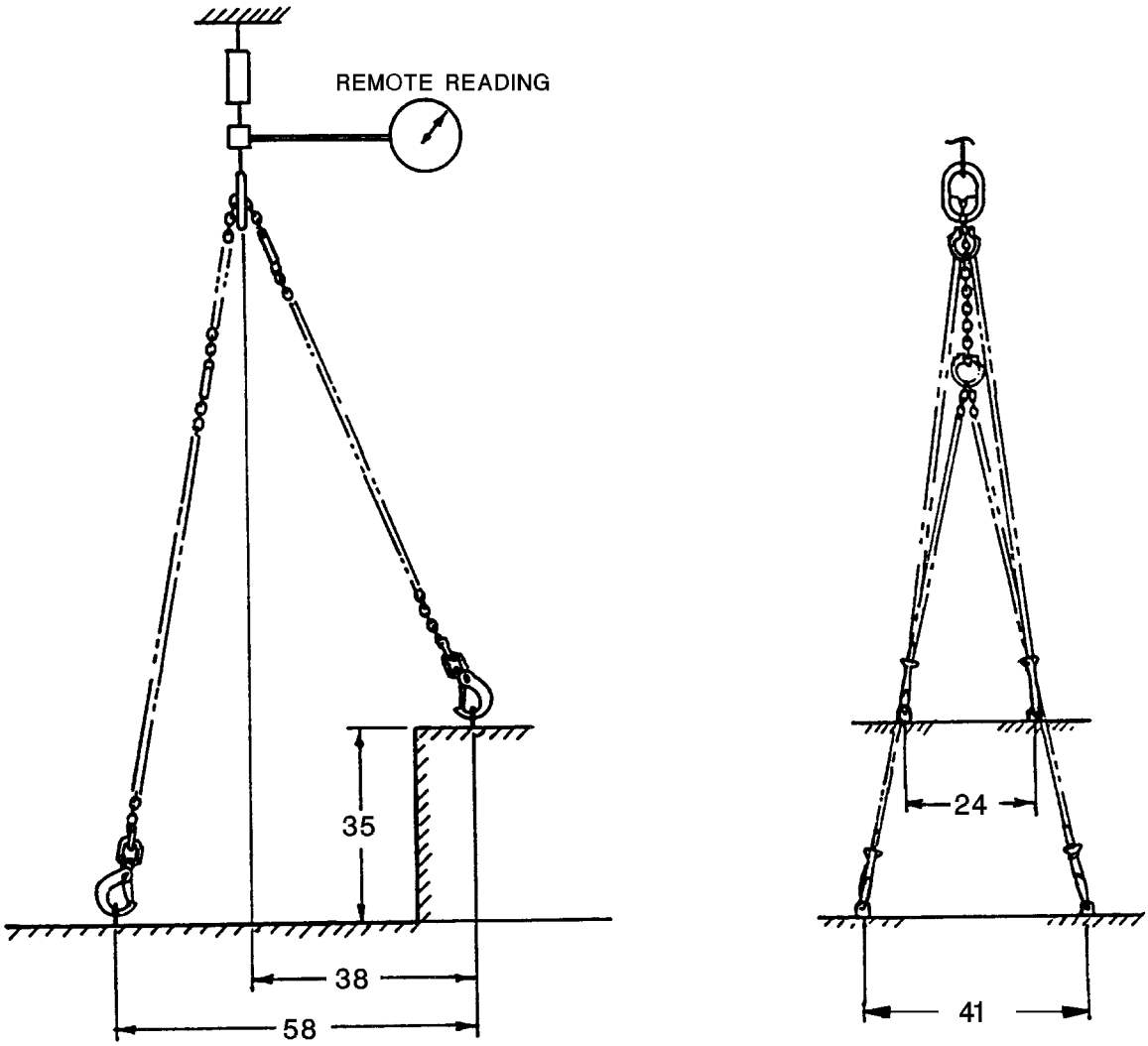

FIGURE 4-127. Test Arrangement, Forklift Truck, Mk 142 Mod 0

SLING,
MK 143 MOD 0
DL 5166696
NSN 1H 1398-01-381-0434

SWL	TEST LOAD	TEST DURATION
4,300 POUNDS	8,600 POUNDS	2 MINUTES

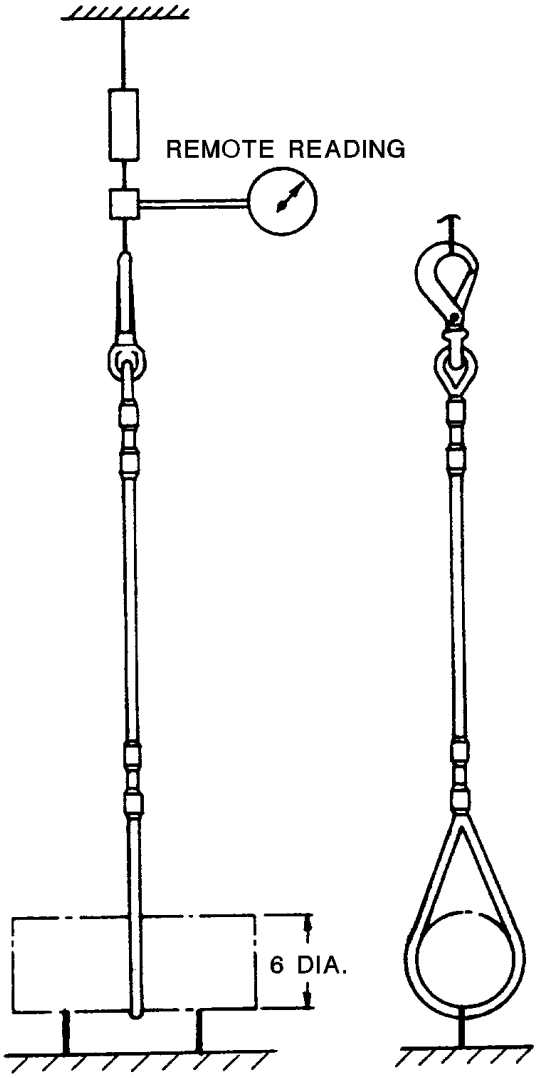

FIGURE 4-128. Test Arrangement, Sling, Mk 143 Mod 0

SLING, PIVOT FIXTURE,
MK 146 MOD 0
PL 6169839-9
NSN 8T 1450-01-220-7733

SWL	TEST LOAD	TEST DURATION
570 POUNDS	1,140 POUNDS	2 MINUTES

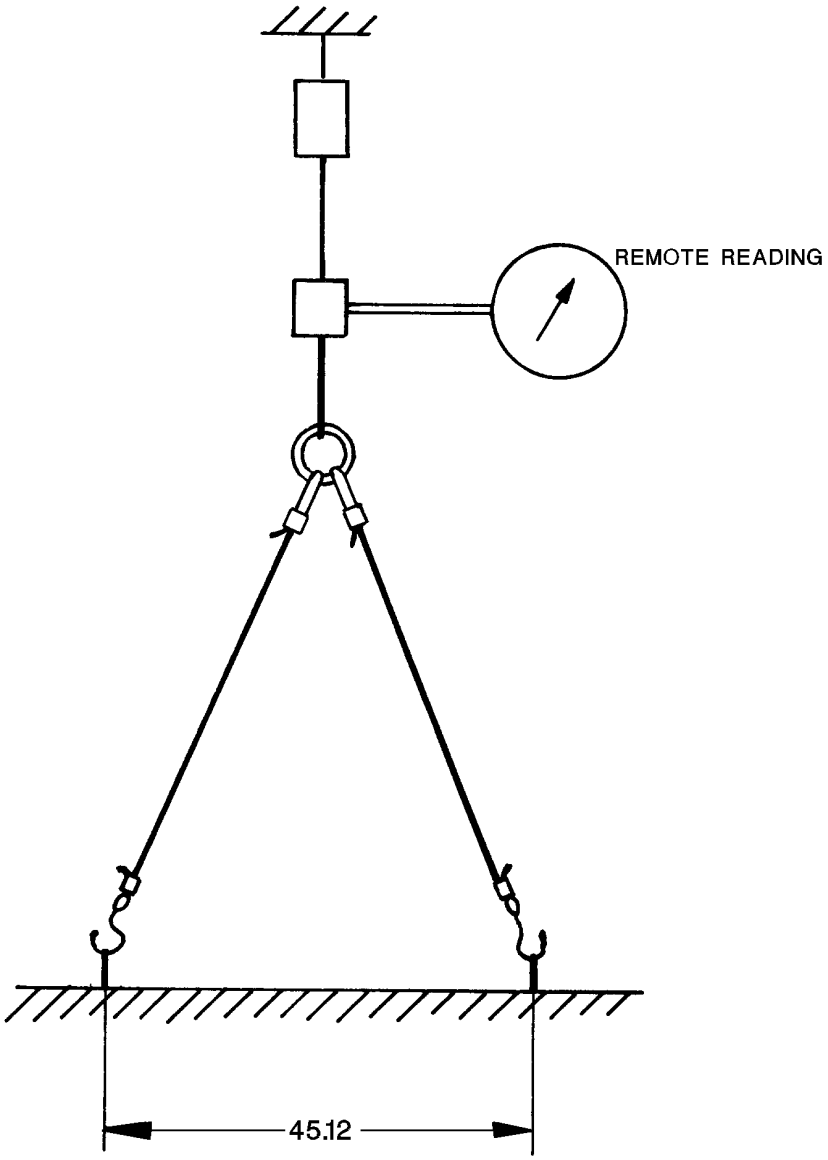

FIGURE 4-129. Test Arrangement, Pivot Fixture Sling, Mk 146 Mod 0

SLING, PLENUM CELL COVER,
MK 147 MOD 0
PL 6169840-9
NSN 8T 1450-01-220-7734

TEST NO.	SWL	TEST LOAD	TEST DURATION
1	570 POUNDS	1,140 POUNDS	2 MINUTES
2	-------	570 POUNDS	2 MINUTES

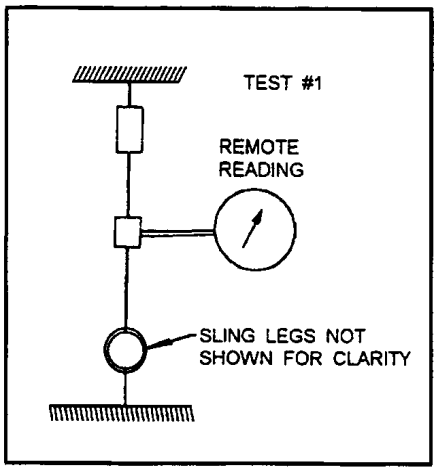

LINK TEST

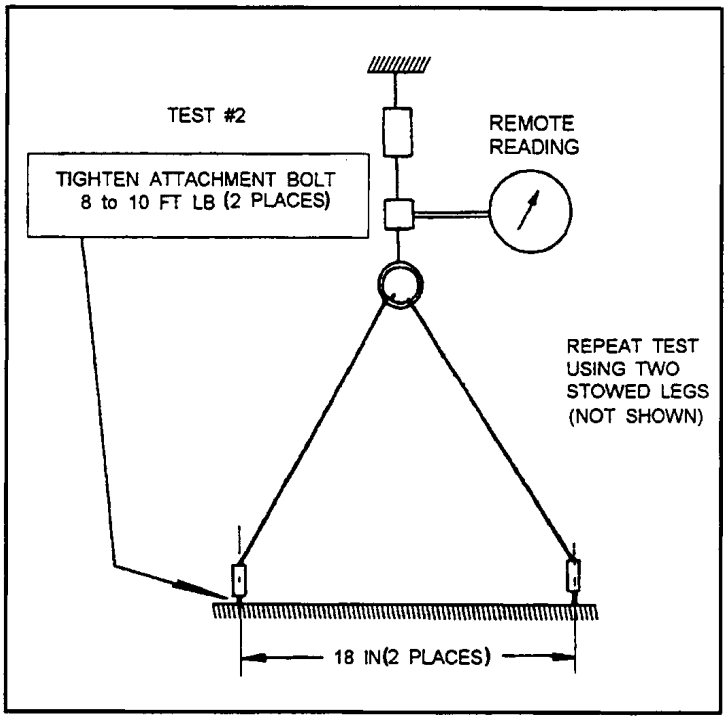

SLING LEG TEST

FIGURE 4-130. Test Arrangement, Plenum Cell Cover Sling, Mk 147 Mod 0

SLING, MISSILE MODULE,
MK 149 MOD 0
PL 6169843-9
NSN 8T 1450-01-220-7732

TEST NO.	SWL	TEST LOAD	TEST DURATION
1	58,000 POUNDS	58,890 POUNDS	2 MINUTES
2	---------	116,000 POUNDS	2 MINUTES

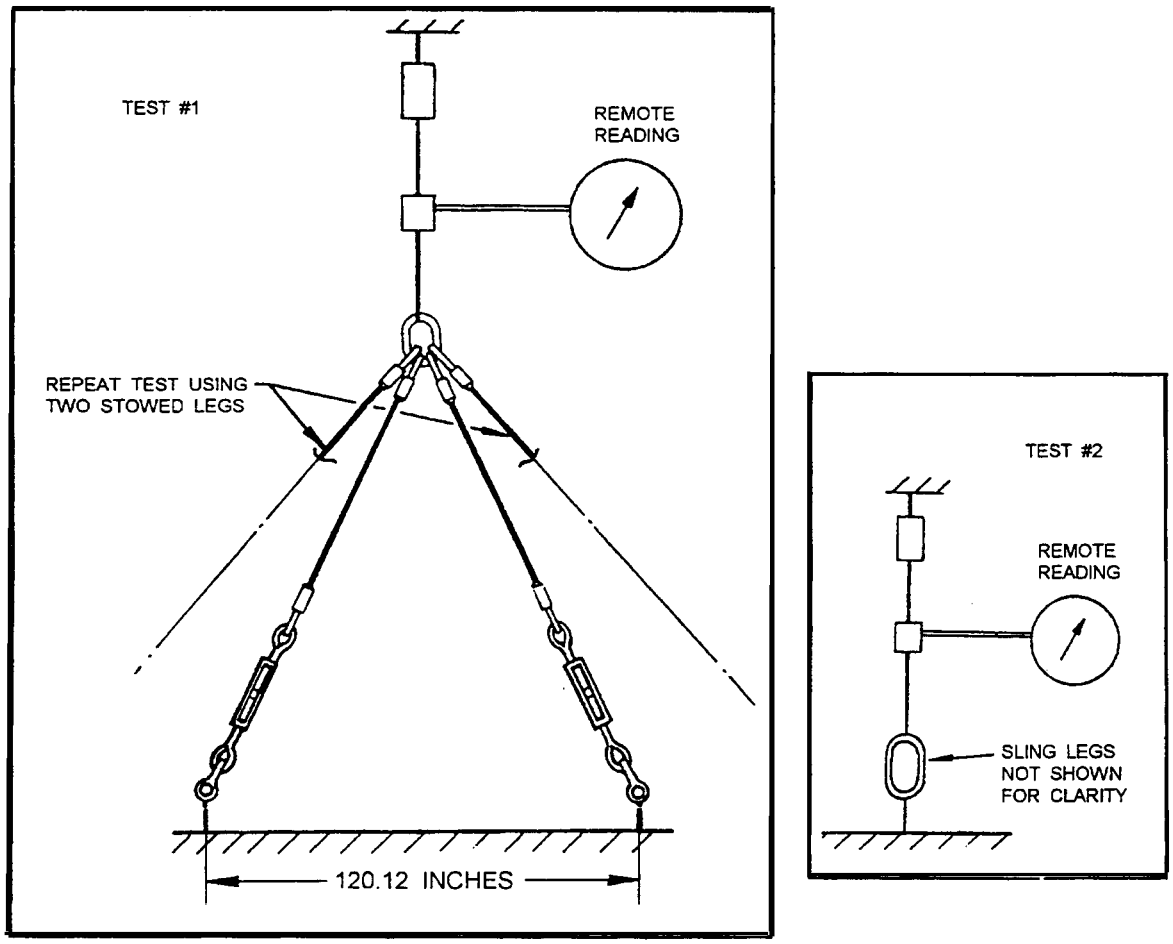

FIGURE 4-131. Test Arrangement, Missile Module Sling, Mk 149 Mod 0 (Sheet 1 of 2)

SLING, MISSILE MODULE,
MK 149 MOD 0
PL 6169843-9
NSN 8T 1450-01-120-7732

TEST NO.	SWL	TEST LOAD	TEST DURATION
1	------	30,400 POUNDS	2 MINUTES
2	------	116,000 POUNDS	2 MINUTES

ALTERNATE TEST METHOD

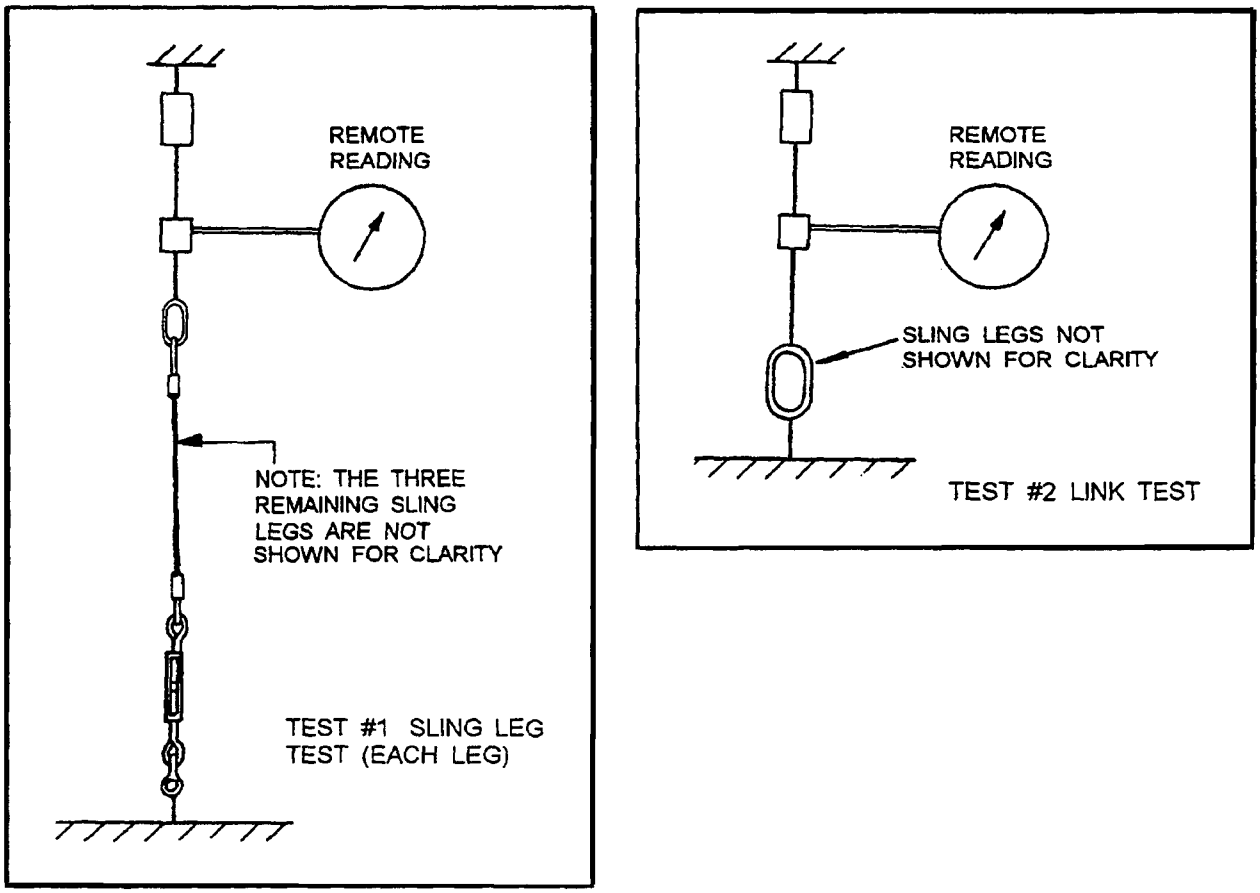

FIGURE 4-132. Test Arrangement, Missile Module Sling, Mk 149 Mod 0 (Sheet 2 of 2)

SLING, MISSILE MODULE,
MK 150 MOD 0
PL 6169842-9
NSN 8T 1450-01-220-7731

SWL	TEST LOAD	TEST DURATION
56,000 POUNDS	112,000 POUNDS	2 MINUTES

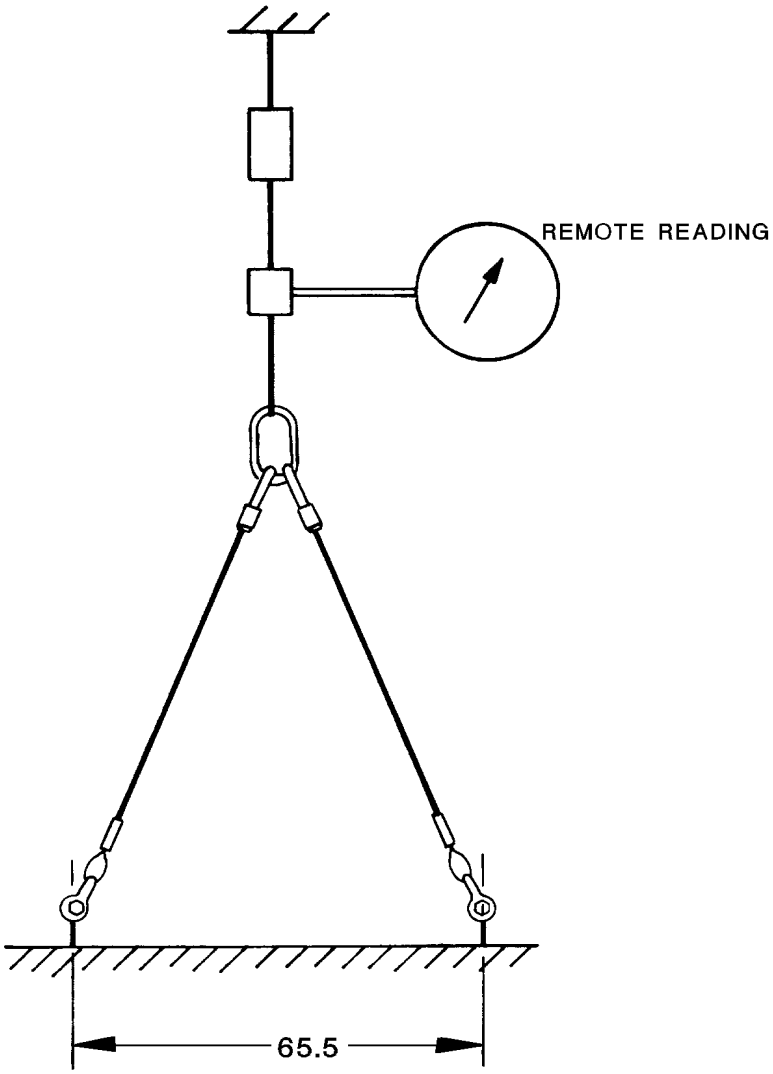

FIGURE 4-133. Test Arrangement, Missile Module Sling, Mk 150 Mod 0 (Sheet 1 of 2)

SLING, MISSILE MODULE,
MK 150 MOD 0
PL 6169842-9
NSN 8T 1450-01-220-7731

TEST NO.	SWL	TEST LOAD	TEST DURATION
1	------	56,000 POUNDS	2 MINUTES
2	------	112,000 POUNDS	2 MINUTES

ALTERNATE TEST METHOD

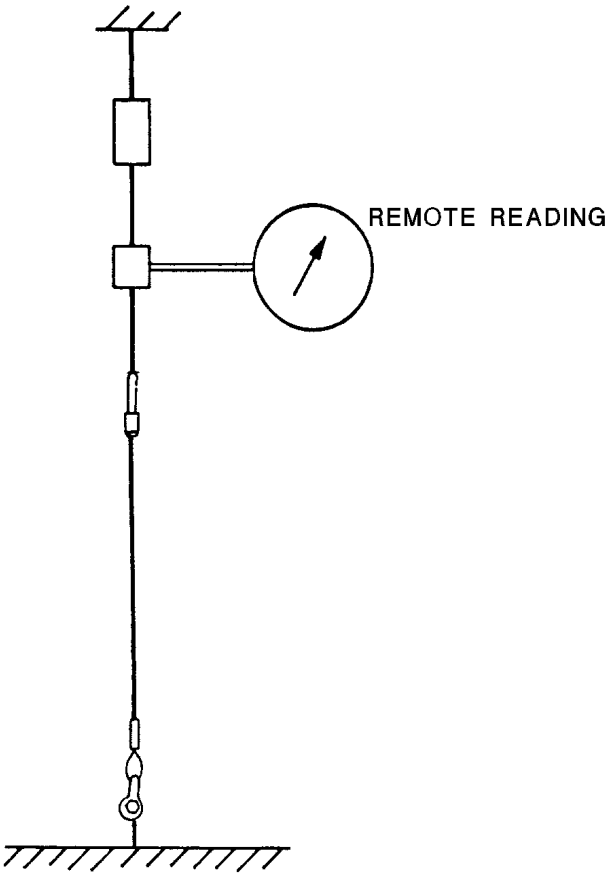

Test No. 1 - Single Leg Test (each leg)

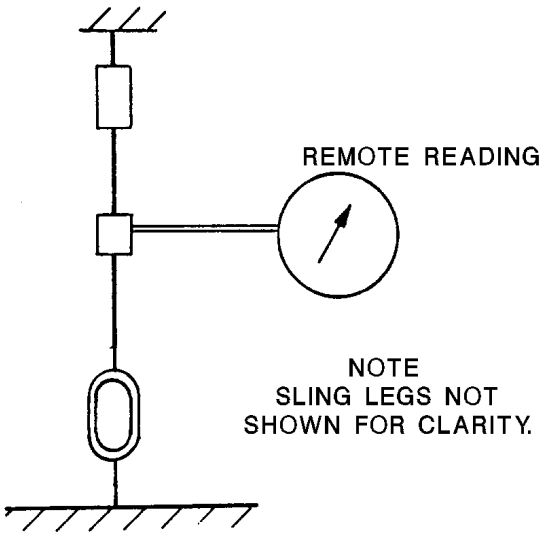

Test No. - Link Test

FIGURE 4-134. Test Arrangement, Missile Module Sling, Mk 150 Mod 0 (Sheet 2 of 2)

SLING, PENDANT,
MK 151 MOD 0
PL 6169841-9
NSN 8T 1450-01-220-7730

SWL	TEST LOAD	TEST DURATION
750 POUNDS	1,500 POUNDS	2 MINUTES

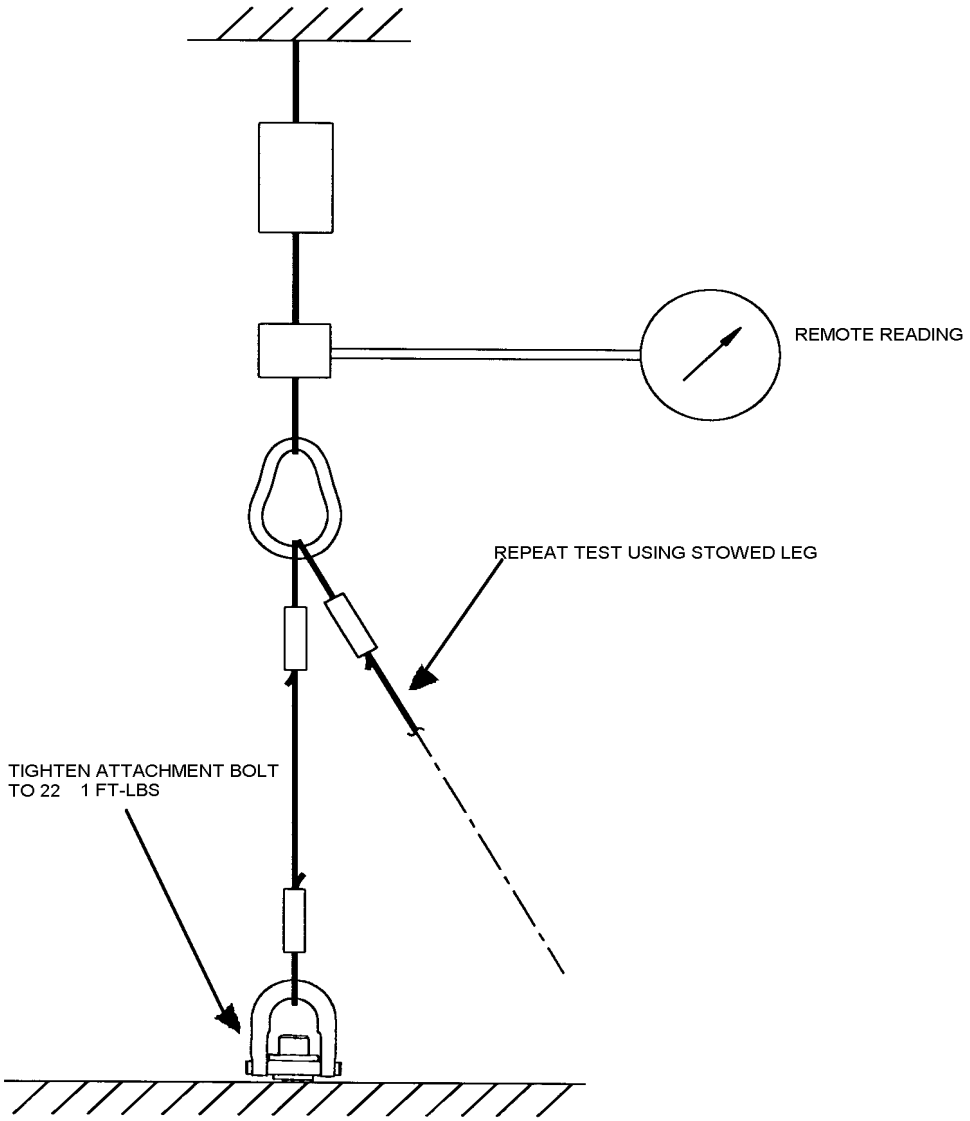

FIGURE 4-135. Test Arrangement, Pendant Sling, Mk 151 Mod 0

SLING, CONTAINER LIFT,
MK 152 MOD 0
DL 5167256
NSN 1H 1450-01-285-4677

SWL	TEST LOAD	TEST DURATION
7,000 POUNDS	14,000 POUNDS	2 MINUTES

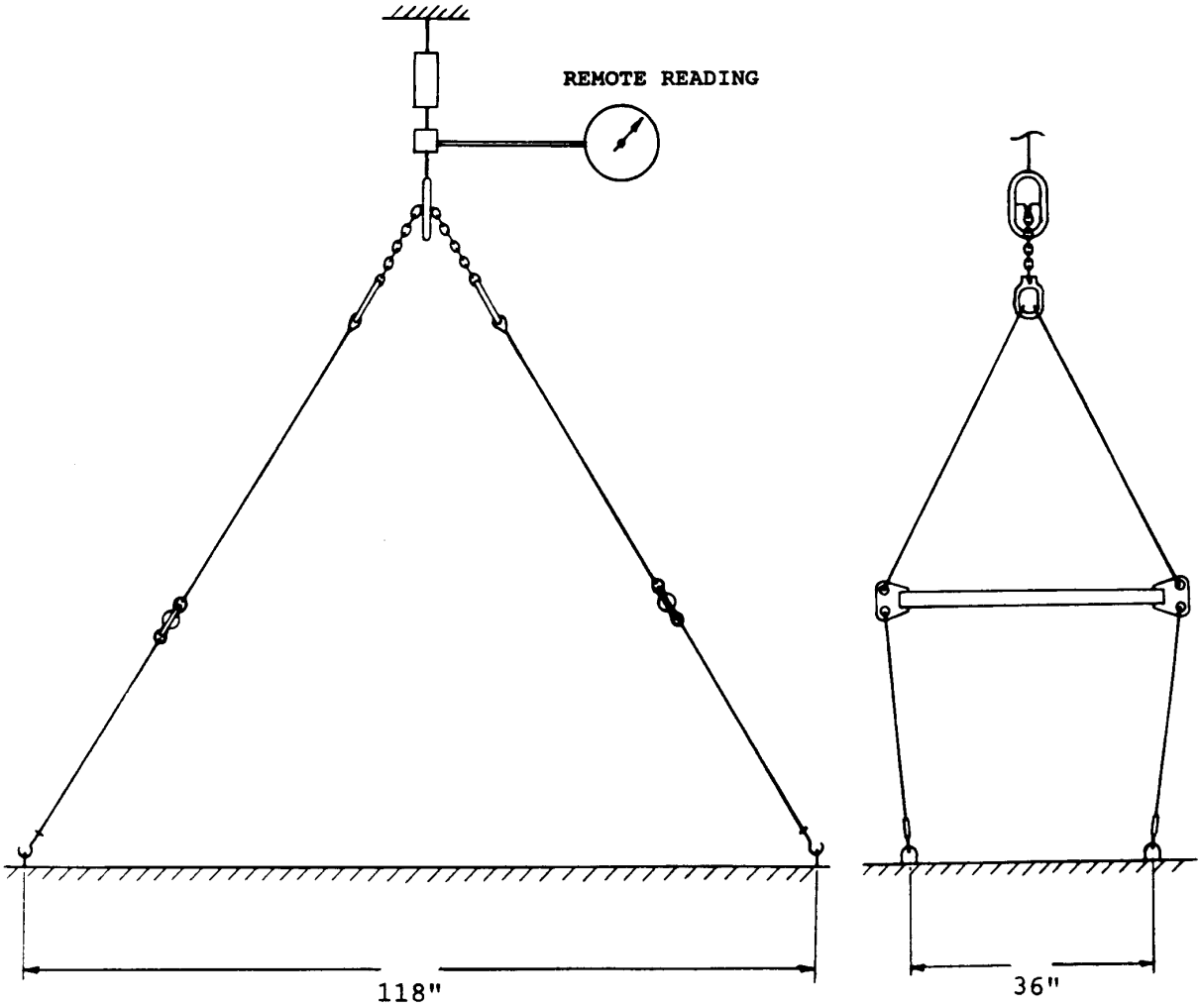

FIGURE 4-136. Test Arrangement, Container Lift Sling, Mk 152 Mod 0

SLING, WEAPONS HANDLING,
MK 153 MOD 0
DL 5167582
NSN 9Z 3940-01-334-5063

SWL	TEST LOAD	TEST DURATION
10,000 POUNDS	20,000 POUNDS	2 MINUTES

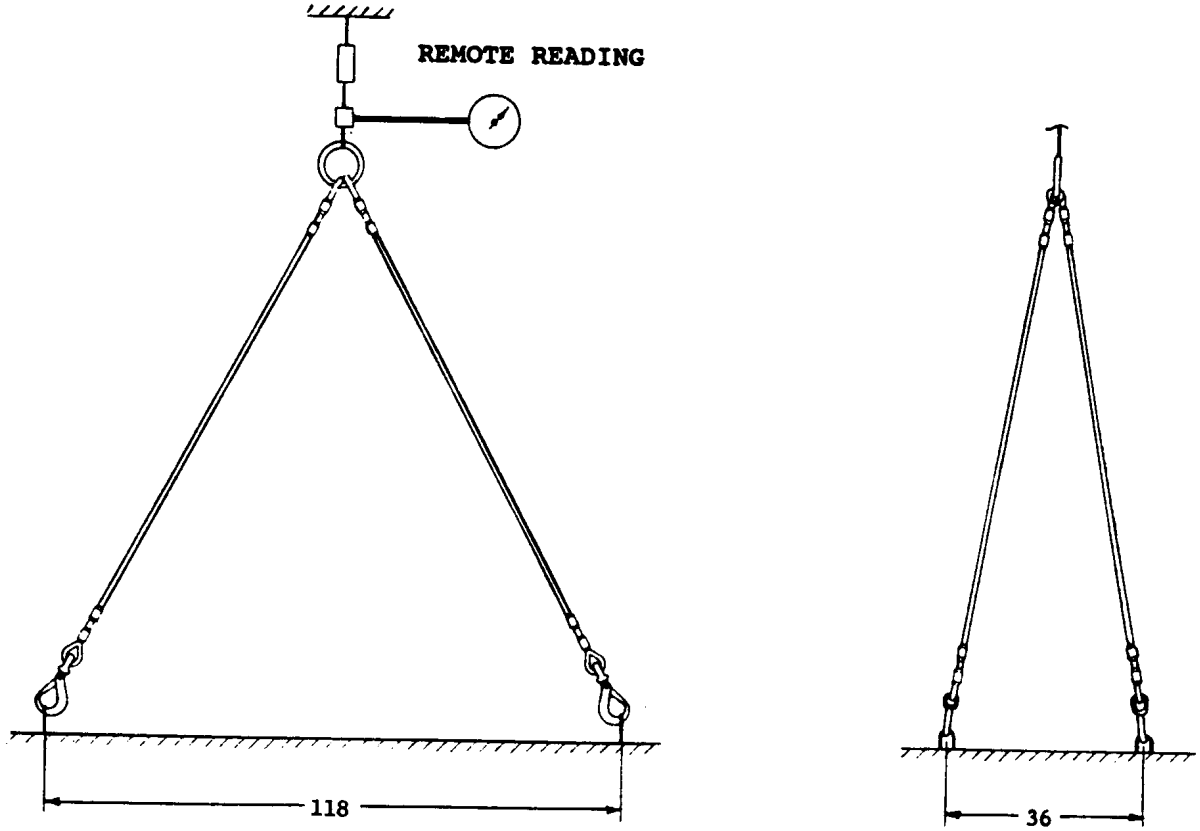

FIGURE 4-137. Test Arrangement, Weapons Handling Sling, Mk 153 Mod 0

SLING,
MK 154 MOD 0
DL 5167321
NSN 9G 3940-01-313-7056

SWL	TEST LOAD	TEST DURATION
8,000 POUNDS	16,000 POUNDS	5 MINUTES

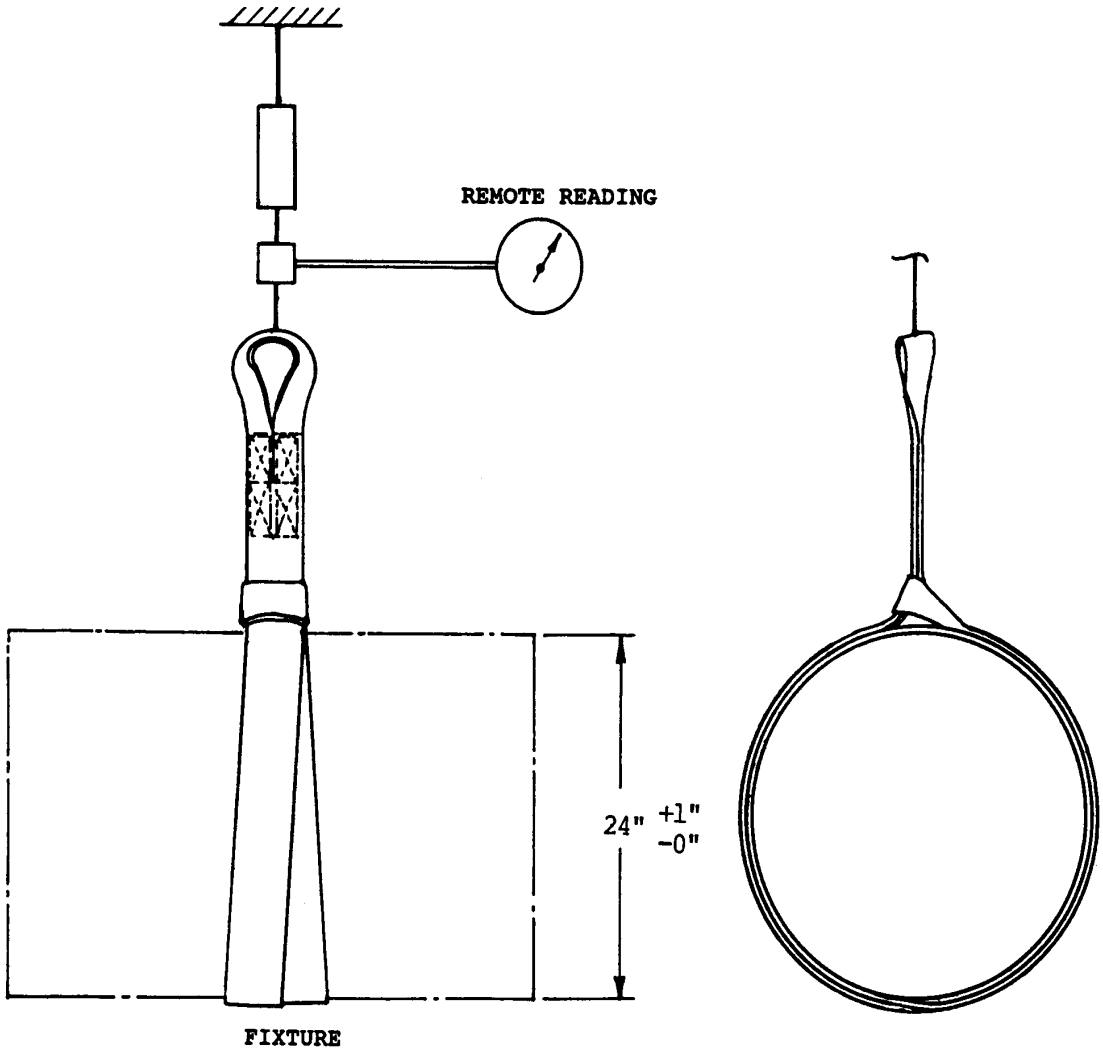

FIGURE 4-138. Test Arrangement, Sling, Mk 154 Mod 0

SLING, WEAPONS HANDLING
MK 155 MOD 0
DL 5167467
NSN 9Z 3940-01-441-6253

SWL	TEST LOAD	TEST DURATION
6,000 POUNDS	12,000 POUNDS	2 MINUTES

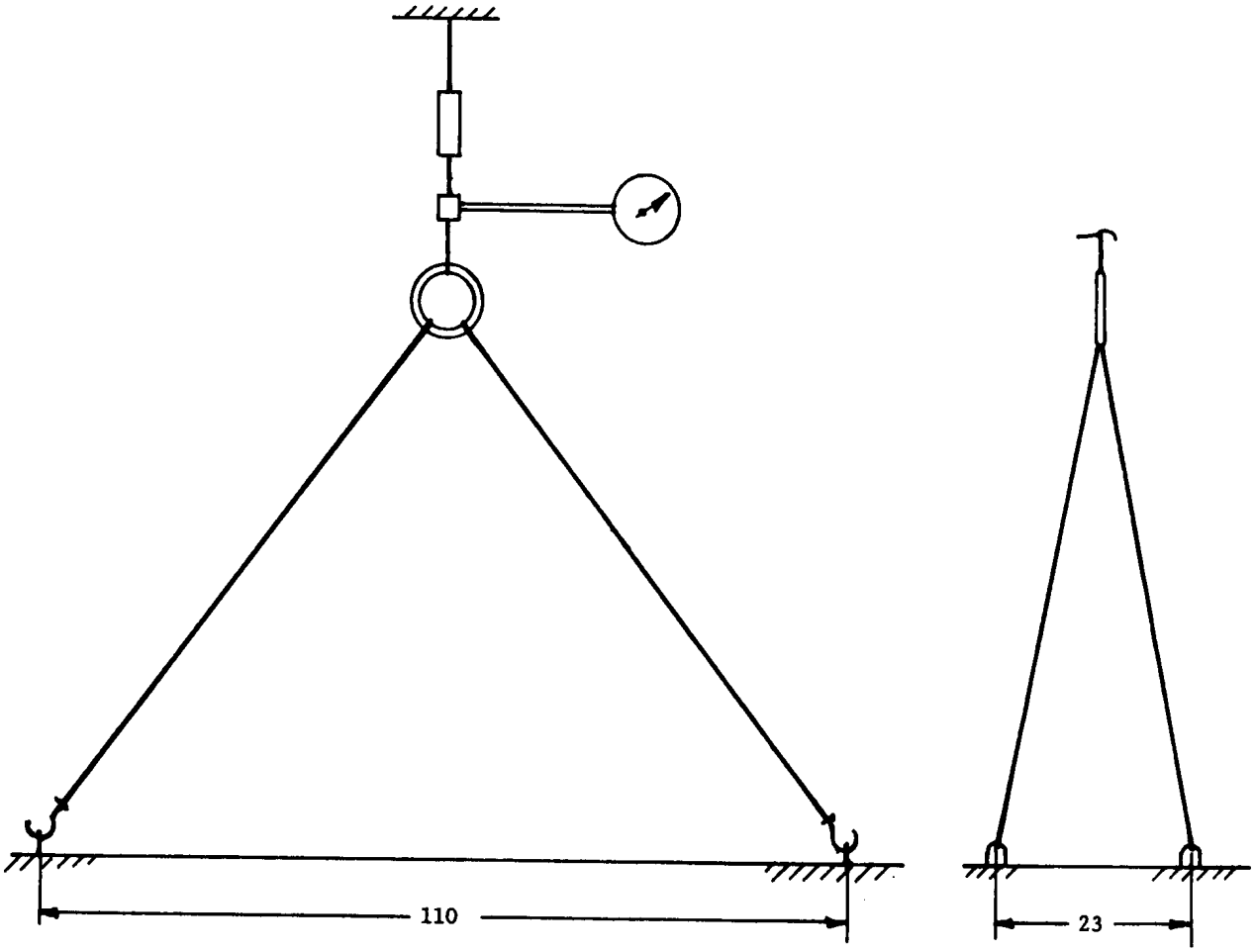

FIGURE 4-139. Test Arrangement, Weapons Handling Sling, Mk 155 Mod 0

SLING, WEAPONS HANDLING
MK 156 MOD 0
DL 5167791
NSN TO BE ASSIGNED

SWL	TEST LOAD	TEST DURATION
1,800 POUNDS	3,600 POUNDS	2 MINUTES

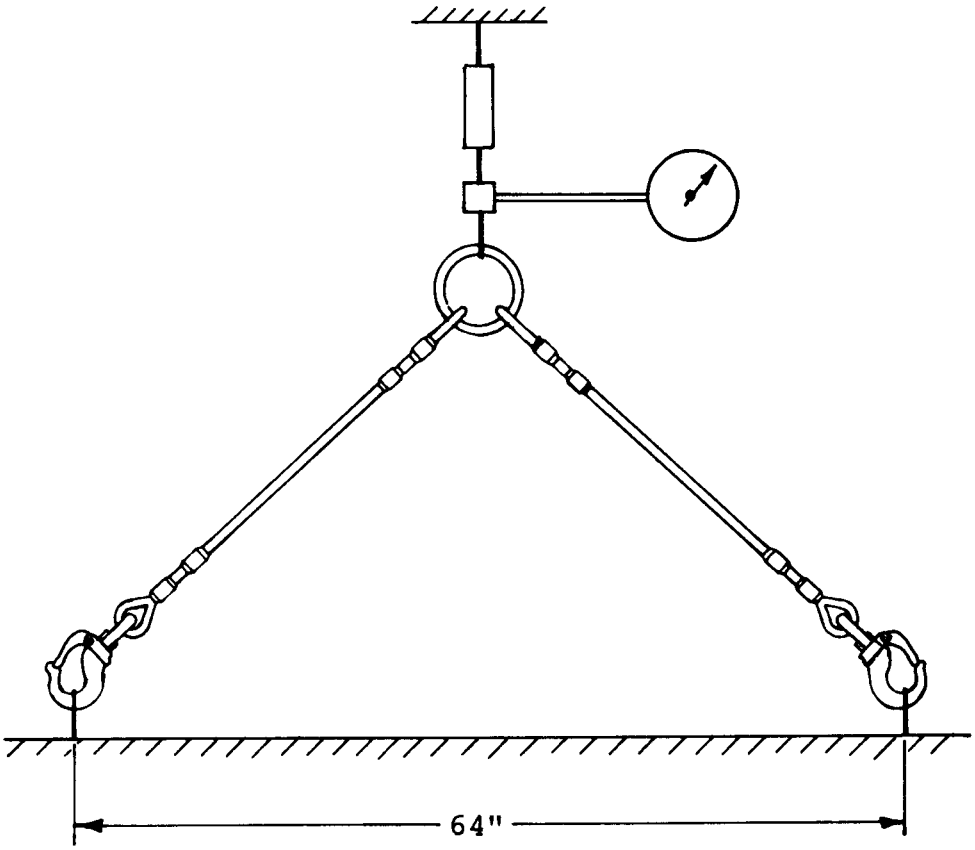

FIGURE 4-140. Test Arrangement, Weapons Handling Sling, MK 156 Mod 0

SLING,
MK 158 MOD 0
DL 5167757
NSN 1H 4010-01-324-5372

SWL	TEST LOAD	TEST DURATION
2,200 POUNDS	4,400 POUNDS	2 MINUTES

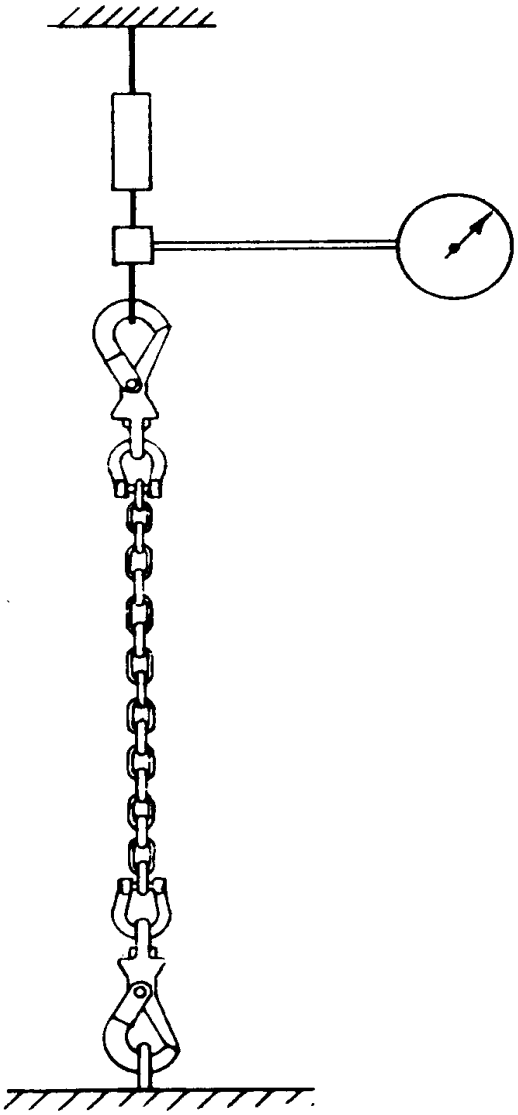

FIGURE 4-141. Test Arrangement, Sling, Mk 158 Mod 0

SLING,
MK 159 MOD 0
DL 6212589
NSN 1H 1398-01-318-6383

SWL	TEST LOAD	TEST DURATION
5,000 POUNDS	10,000 POUNDS	5 MINUTES

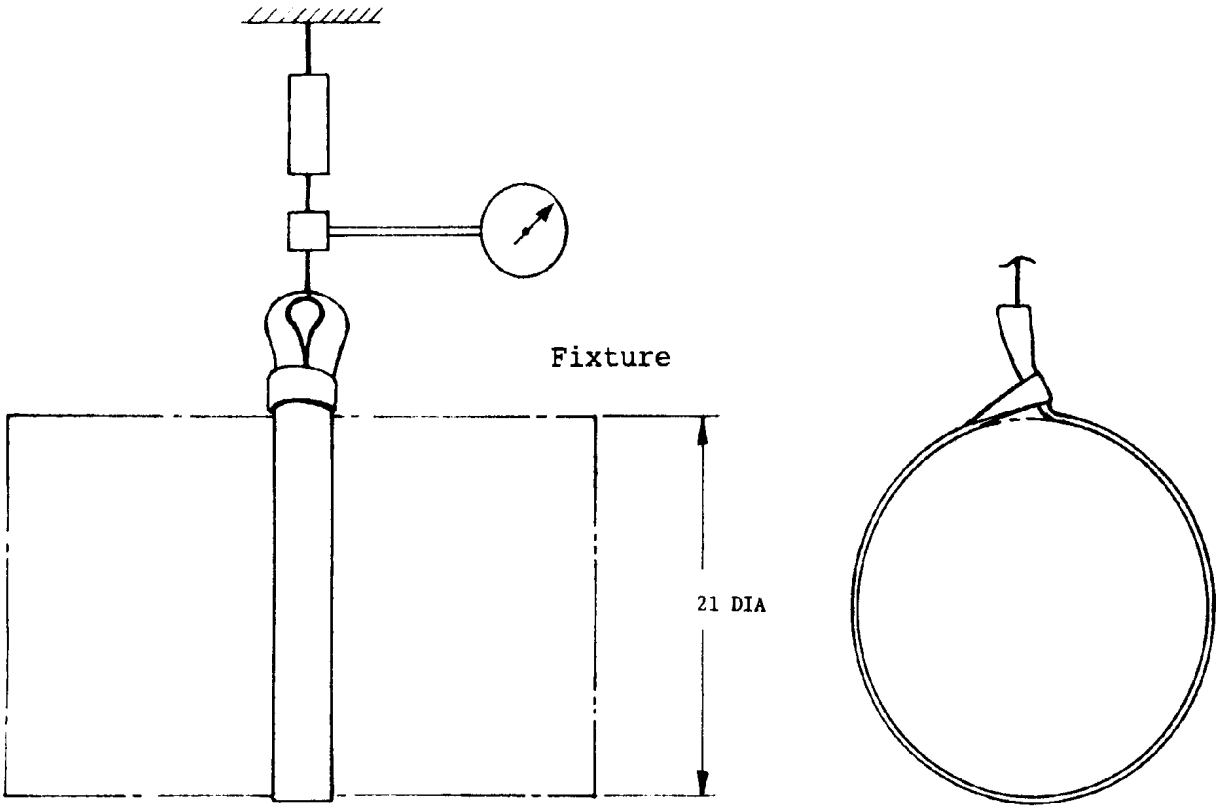

FIGURE 4-142. Test Arrangement, Sling, Mk 159 Mod 0

SLING,
MK 161 MOD 0
DL 6212810
NSN 1H 3940-01-376-3368

SWL	TEST LOAD	TEST DURATION
3,000 POUNDS	6,000 POUNDS	2 MINUTES

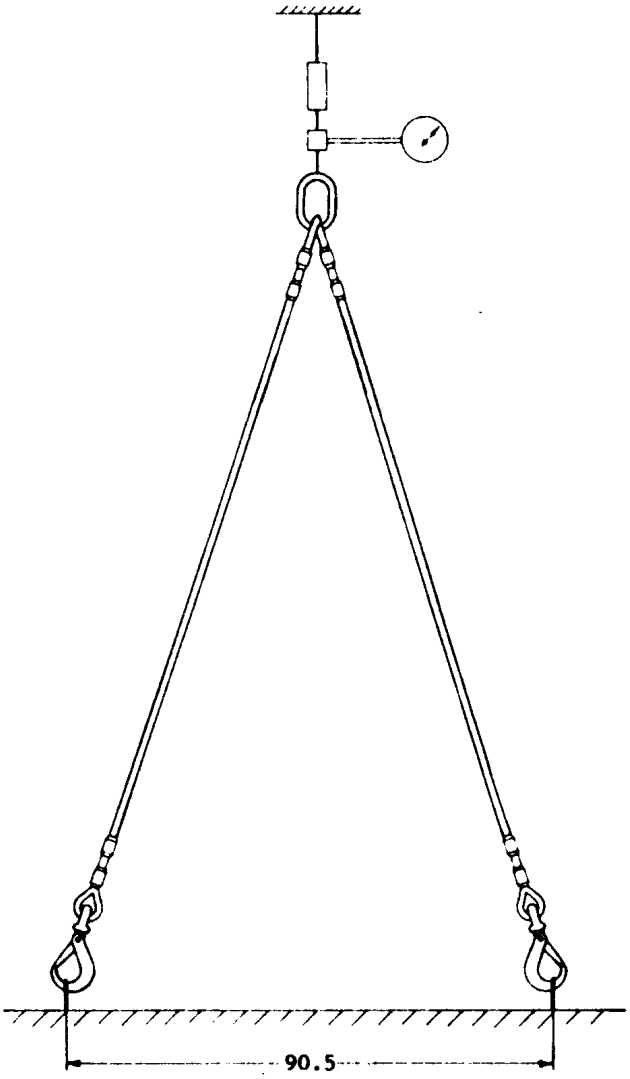

FIGURE 4-143. Test Arrangement, Sling, Mk 161 Mod 0

SLING,
MK 162 MOD 0
DL 6212682
NSN 3C 1450-01-340-9445

SWL	TEST LOAD	TEST DURATION
7,500 POUNDS	15,000 POUNDS	2 MINUTES

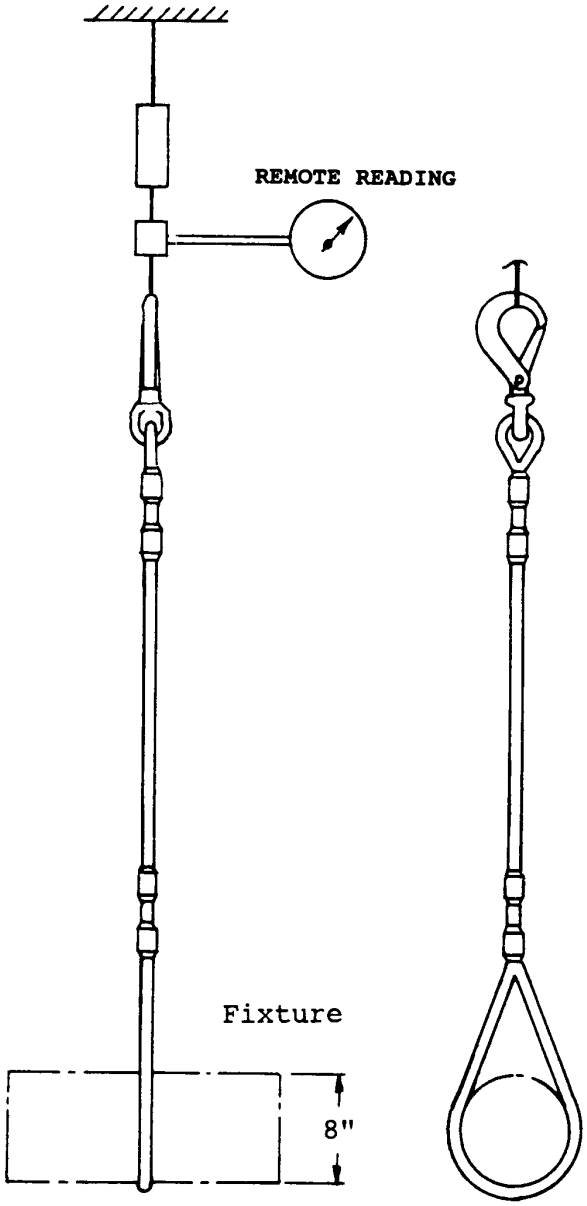

FIGURE 4-144. Test Arrangement, Sling, Mk 162 Mod 0

SLING, WEAPON HANDLING
MK 163 MOD 0
DL 5167632
NSN TO BE ASSIGNED

SWL	TEST LOAD	TEST DURATION
2,500 POUNDS	5,000 POUNDS	5 MINUTES

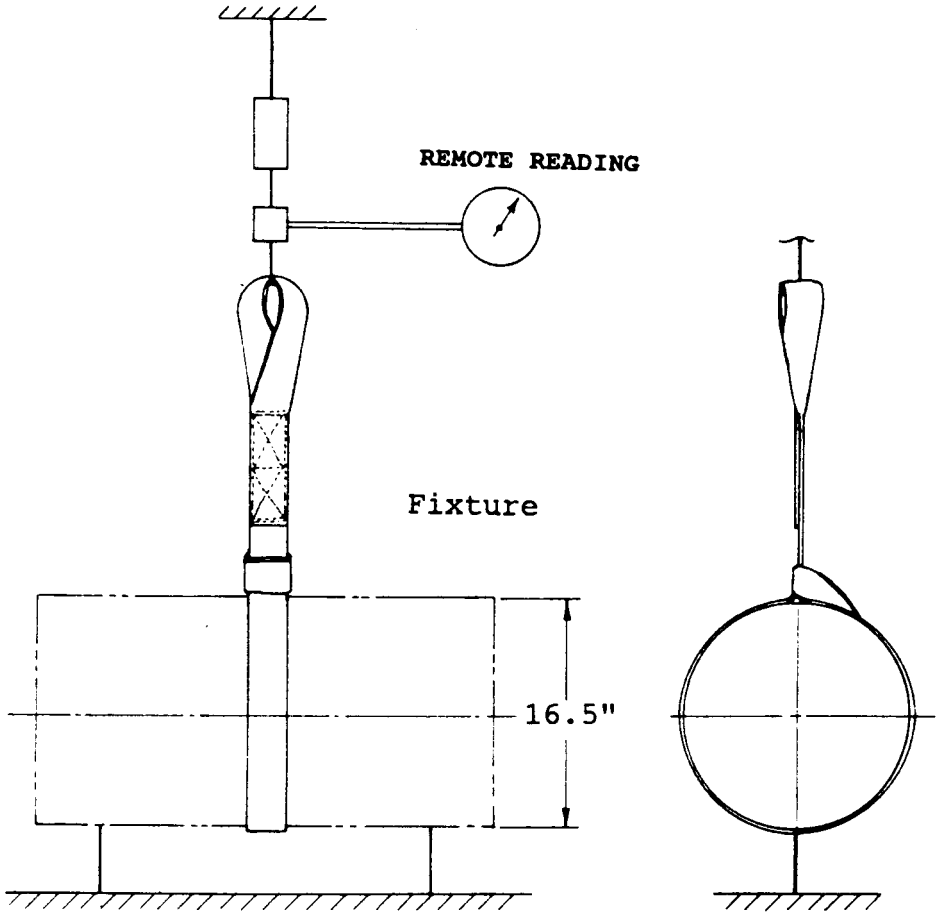

FIGURE 4-145. Test Arrangement, Weapon Handling Sling, Mk 163 Mod 0

SLING,
MK 164 MOD 0
DL 6212766
NSN 1H 4010-01-373-9251

SWL	TEST LOAD	TEST DURATION
2,000 POUNDS	4,000 POUNDS	2 MINUTES

CAUTION

The corner edge bearing surface of fixture shall be rounded (1.5 inch radius minimum) to prevent damage to sling legs.

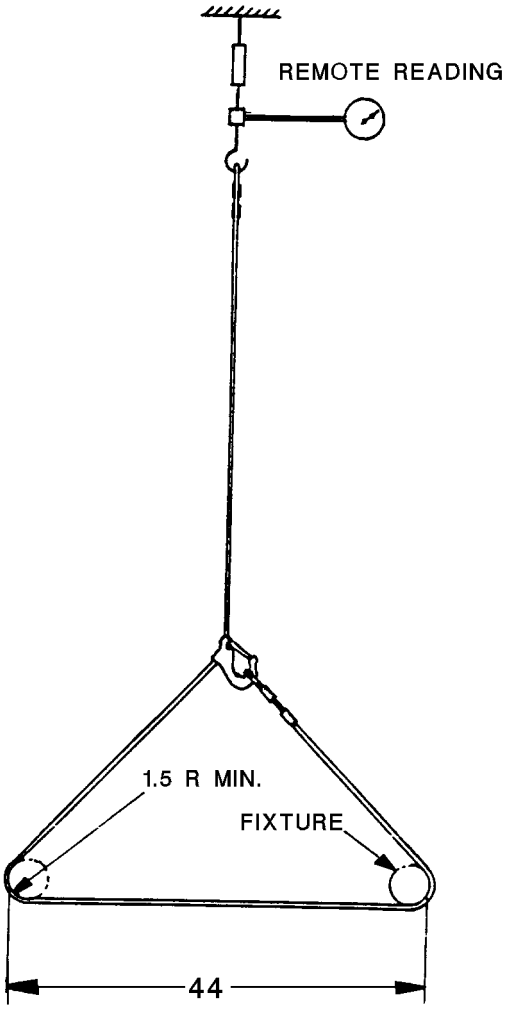

FIGURE 4-146. Test Arrangement, Sling, Mk 164 Mod 0

SLING, PENDANT,
MK 165 MOD 0
DL 6213009
NSN 1H 4010-01-368-1816

SWL	TEST LOAD	TEST DURATION
11,500 POUNDS	23,000 POUNDS	2 MINUTES

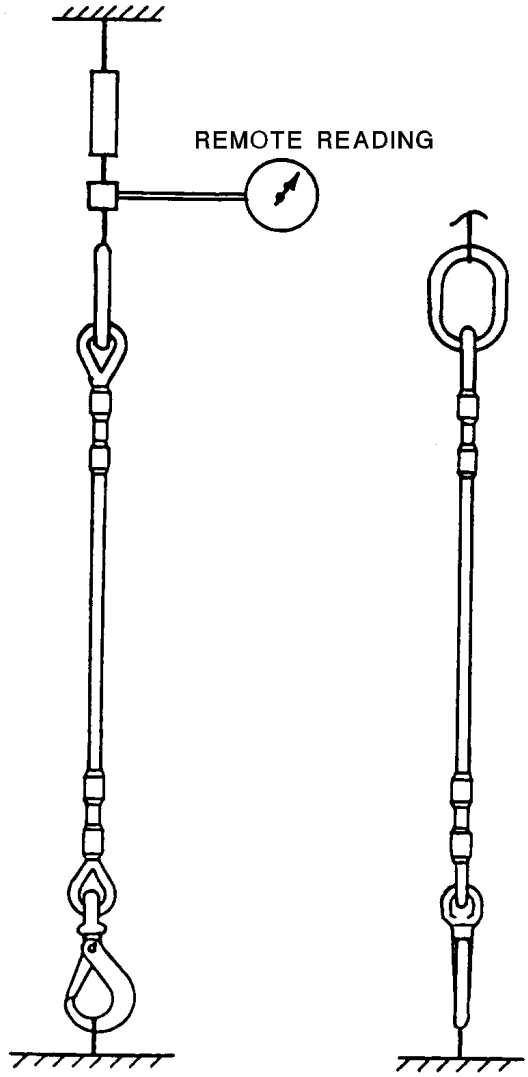

FIGURE 4-147. Test Arrangement, Sling, Pendant, Mk 165 Mod 0

SLING,
MK 165 MOD 1
DL 6213750
NSN TO BE ASSIGNED

SWL	TEST LOAD	TEST DURATION
17,000 POUNDS	34,000 POUNDS	2 MINUTES

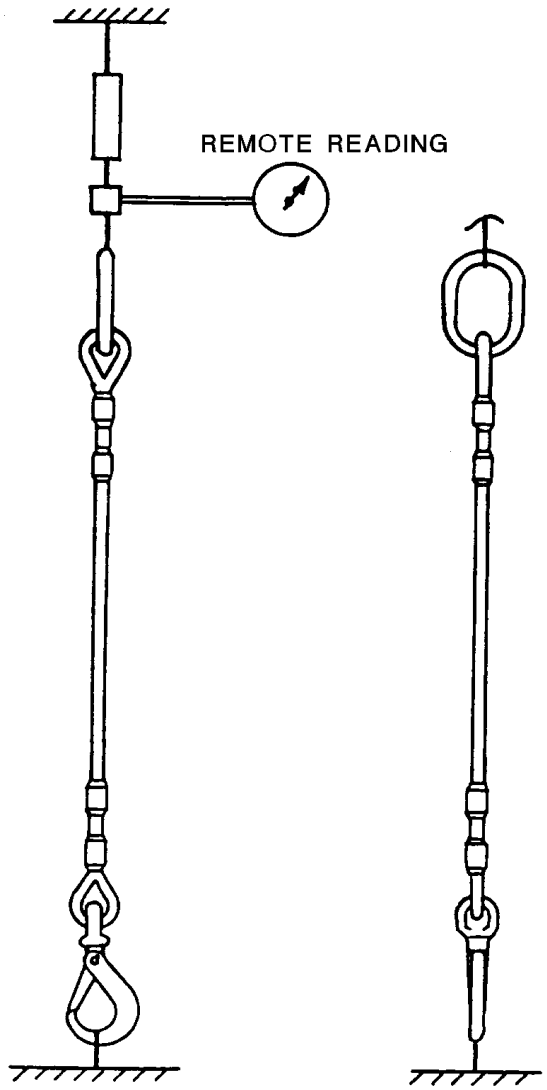

FIGURE 4-148. Test Arrangement, Sling, Pendant, Mk 165 Mod 1

SLING,
MK 166 MOD 0
DL 6213006
NSN 1H 3940-01-366-2361

SWL	TEST LOAD	TEST DURATION
8,000 POUNDS	16,000 POUNDS	5 MINUTES

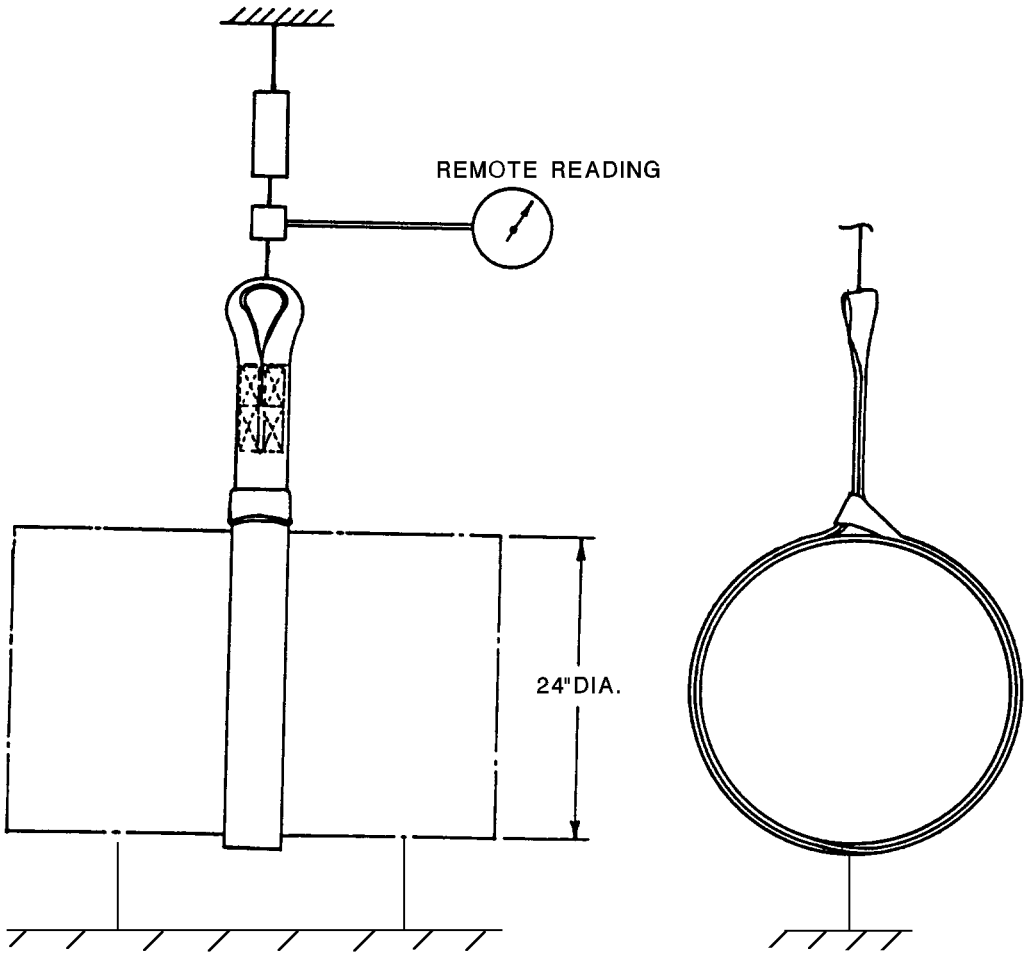

FIGURE 4-149. Test Arrangement, Sling, Mk 166 Mod 0

SLING,
MK 169 MOD 0
DL 6213384
NSN 9G 4010-01-390-0305

SWL	TEST LOAD	TEST DURATION
1,250 POUNDS	2,500 POUNDS	2 MINUTES

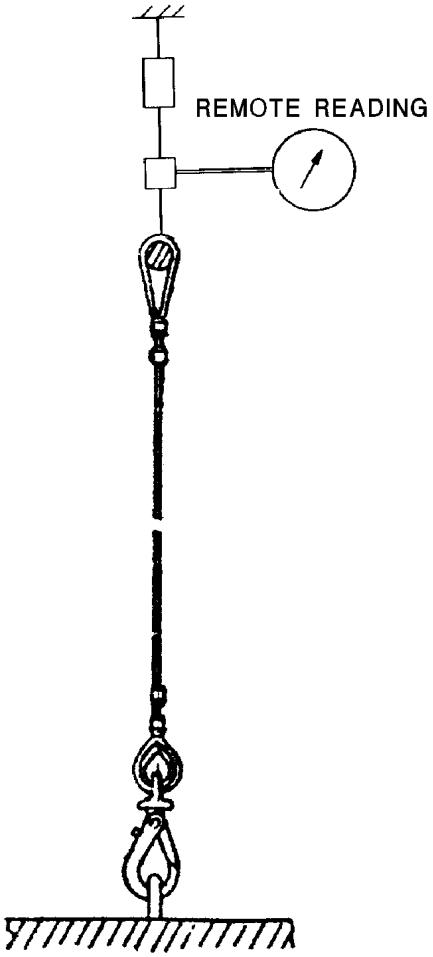

FIGURE 4-150. Test Arrangement, Sling, Mk 169 Mod 0

SLING,
MK 170 MOD 0
P/N 3281102
NSN 6T 1398-01-221-0906

SWL	TEST LOAD	TEST DURATION
125 POUNDS	250 POUNDS	2 MINUTES

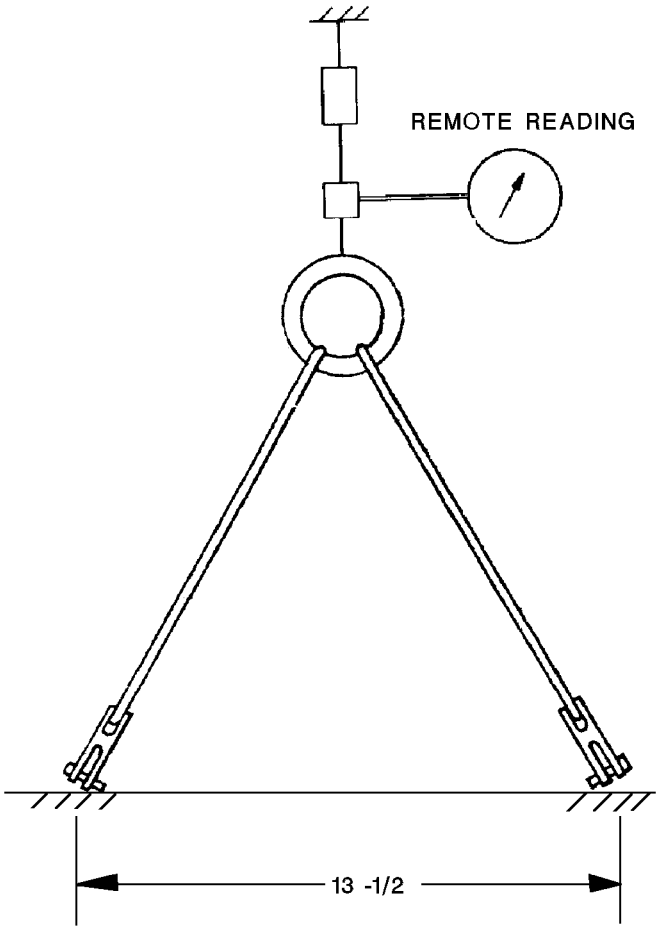

FIGURE 4-151. Test Arrangement, Sling, Mk 170 Mod 0

SLING,
MK 171 MOD 0
DL 6213569
NSN TO BE ASSIGNED

SWL	TEST LOAD	TEST DURATION
5,000 POUNDS	10,000 POUNDS	2 MINUTES

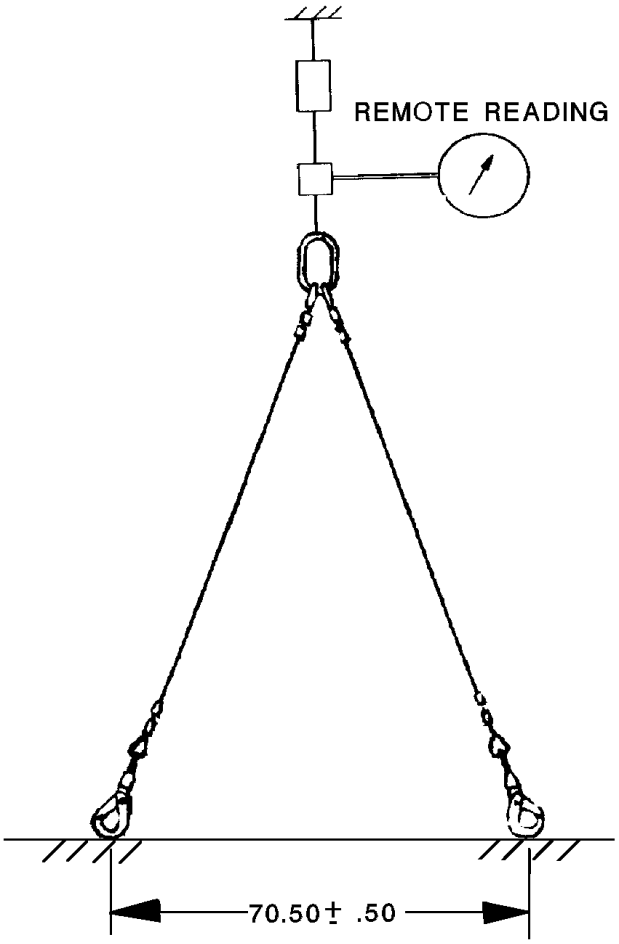

FIGURE 4-152. Test Arrangement, Sling, Mk 171 Mod 0

SLING,
MK 172 MOD 0
DL 6213568
NSN TO BE ASSIGNED

SWL	TEST LOAD	TEST DURATION
5,000 POUNDS	10,000 POUNDS	5 MINUTES

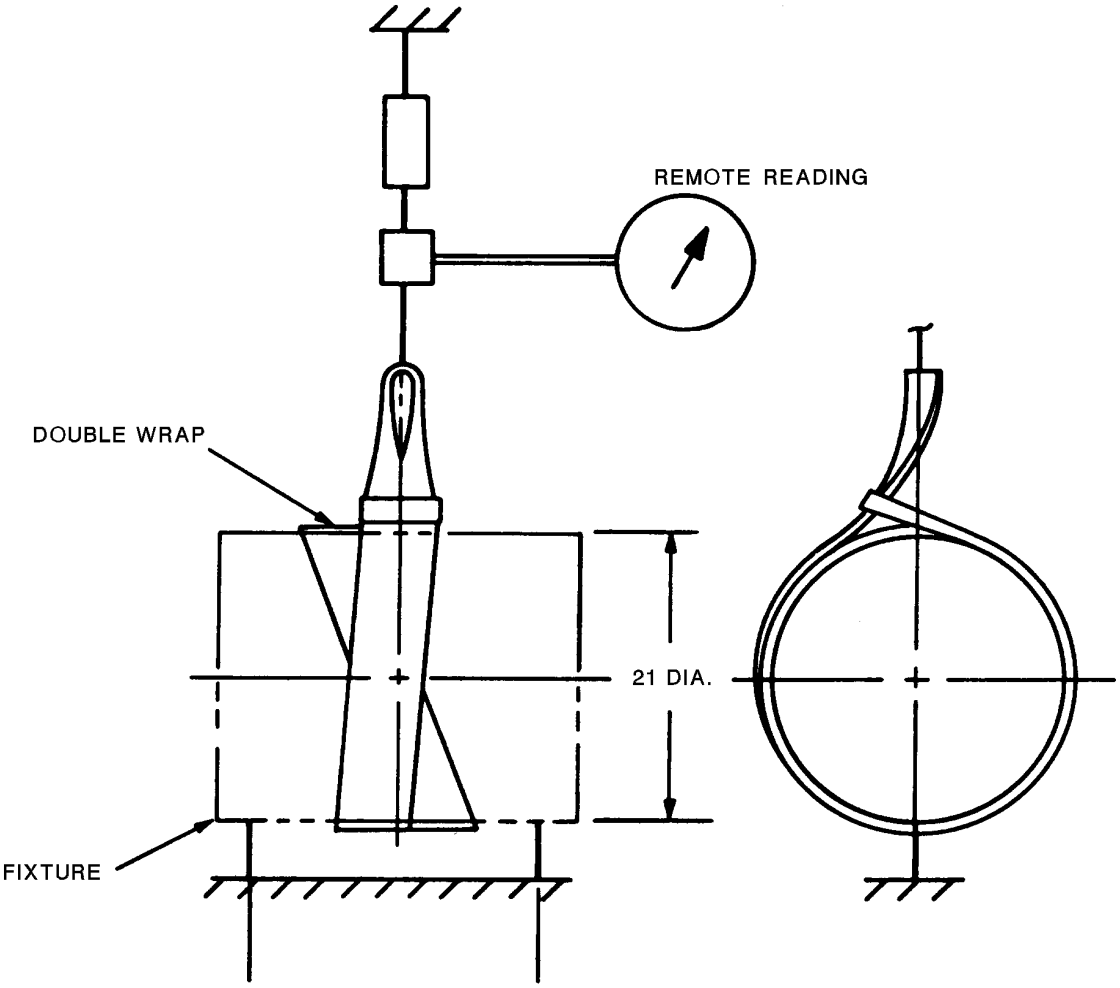

FIGURE 4-153. Test Arrangement, Sling, Mk 172 Mod 0

SLING,
MK 173 MOD 0
DL 6213663
NSN 9C 1450-01-428-6914

SWL	TEST LOAD	TEST DURATION
100 POUNDS	180 POUNDS	2 MINUTES

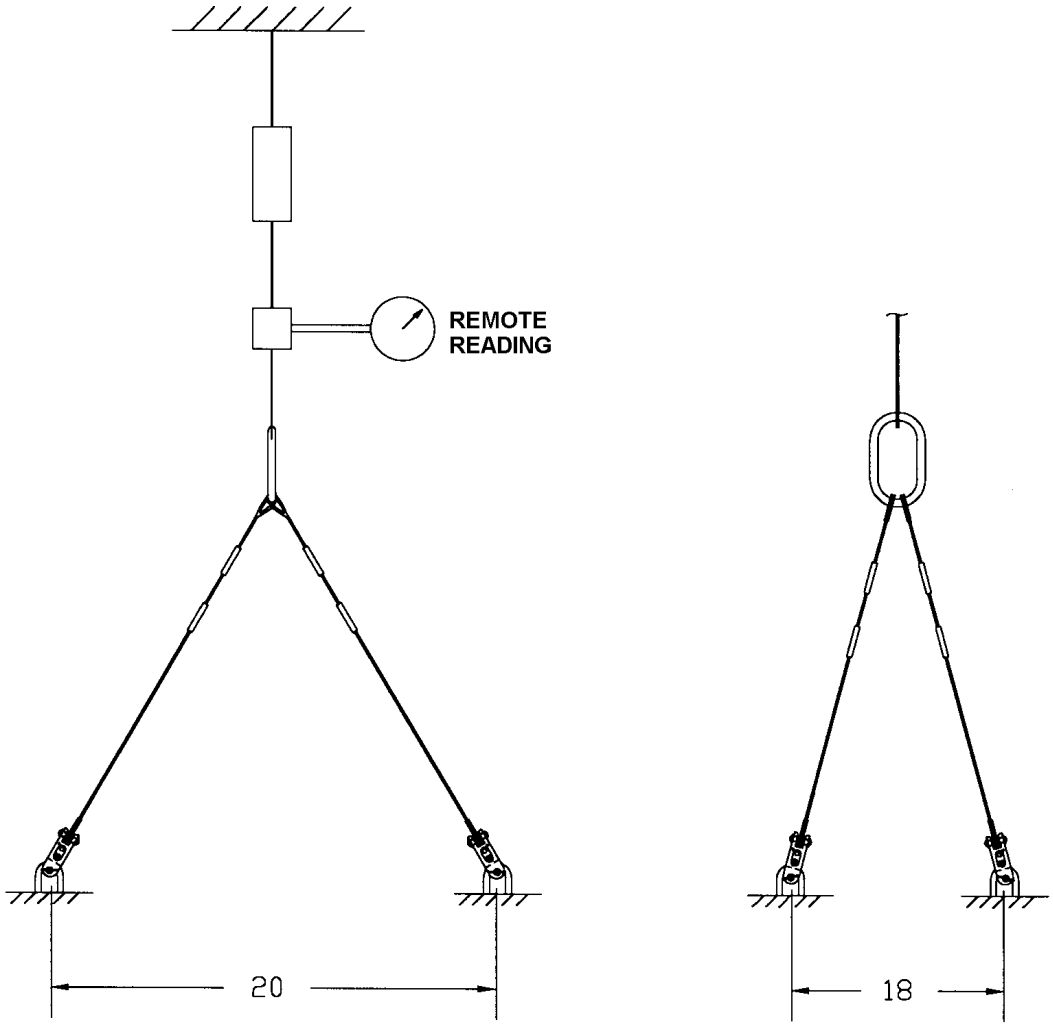

FIGURE 4-154. Test Arrangement, Sling, Mk 173 Mod 0

SLING,
MK 176 MOD 0
DL 6213844
NSN 9Z 3940-01-449-4241

SWL	TEST LOAD	TEST DURATION
2,500 POUNDS	5,000 POUNDS	2 MINUTES

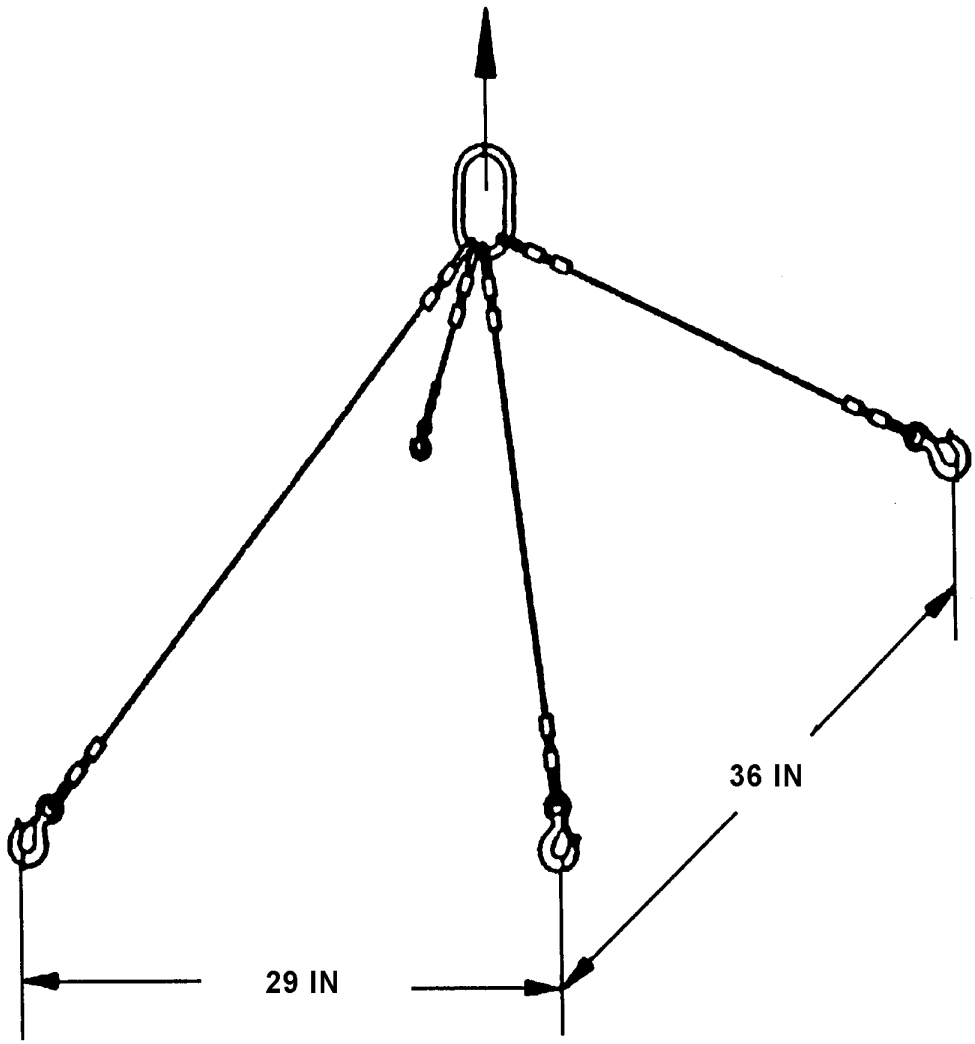

FIGURE 4-155. Test Arrangement, Sling, Mk 176 Mod 0

SLING, CONTAINER, LIFTING
HLU-265/E
DL 1685AS100
NSN 7H 1450-01-125-2297

SWL	TEST LOAD	TEST DURATION
7,000 POUNDS	14,000 POUNDS	2 MINUTES

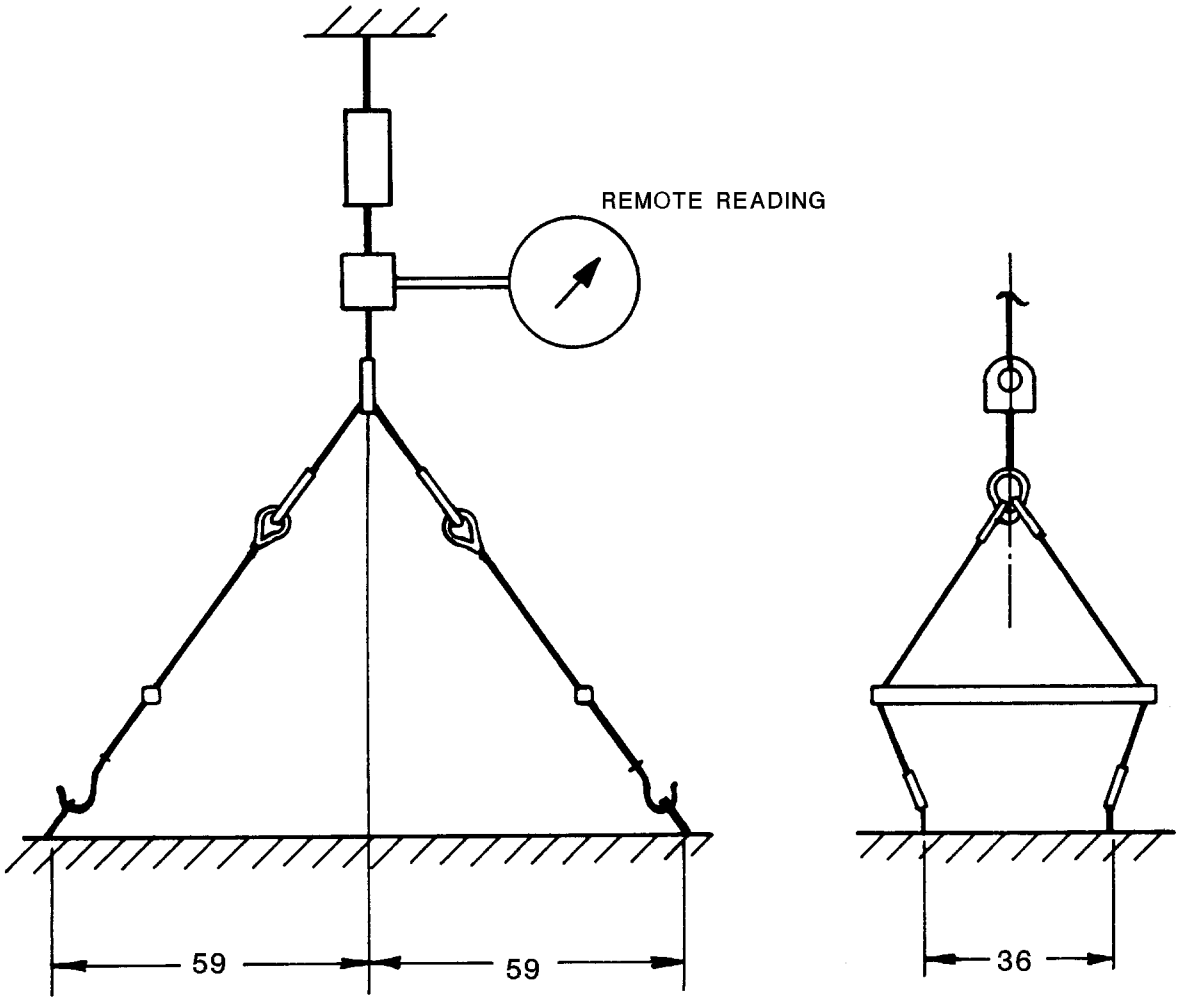

FIGURE 4-156. Test Arrangement, Hoisting AUR Container Sling, HLU-265/E

Section X

STRONGBACKS

4-11. GENERAL

Strongbacks requiring testing are listed in Table 4-10 with cross reference to their drawing/DL/LD numbers; test arrangement figure numbers; maintenance index page (MIP) number/Intermediate and Depot Maintenance Instructions, OR-99/XXXXXXX; weight; rated SWL's; applied test load; and test duration of items used both ashore and aboard ship. Accessory fittings and hardware (safety hooks, chain links, wire rope or cables, lifting eyes, quick-release pins, etc.) that are damaged or do not comply with applicable drawings and specifications or loose or missing parts shall be cause for rejection. Associated handling equipment, used with the strongback and found unsatisfactory, shall not be a cause for rejection of the strongback itself. Before, during and after testing strongbacks, the precautions included in paragraphs 2-5.1, 2-5.2 and 2-5.3 shall be observed.

Table 4-10. Quick Reference Data, Strongbacks

ITEM NOMENCLATURE	DRAWING OR DL/LD	FIGURE NO.	MIP NO. OR OR-99/	ITEM WEIGHT (LBS)	SAFE WORKING LOAD (LBS)	TEST LOAD (LBS)	TEST DURATION (MIN.)
Strongback, Mk 1 Mod 0	DL 5166704	4-157 (1) 4-157 (2) 4-157 (3)	7721/ R95	437	*7,200 #7,200 +6,300	14,400 14,400 12,600	2 2 2
Strongback, Mk 1 Mod 1	DL 6212544	4-158 (1) 4-158 (2) 4-158 (3)	7221/R95	517	*8,000 #8,000 +8,000	16,000 16,000 16,000	2 2 2
Strongback, Horizontal Transfer Assembly, Mk 3 Mod 0	PL5598249-19	4-159 (1) 4-159 (2)	7221/R94	199	*7,550 #7,550	15,100 15,100	2 2
Strongback, Vertical Assembly, Mk 4 Mod 0	PL5497606-19	4-160	7221/R96	51	6,700	13,400	2
Strongback, Cargo, STREAM, Heavy Lift, Mk 5 Mod 1	DL 5177023	4-161 (1) 4-161 (2)		125	*10,000 #10,000	20,000 20,000	5 5
Strongback, Vertical Assembly, Mk 6 Mod 0	PL 711600-9	4-162		53	6,700	13,400	2

* Test No. 1

\# Test No. 2

\+ Test No. 3

NOTE: Test frequency columns have been deleted in accordance with paragraph 4-1.

STRONGBACK,
MK 1 MOD 0
DL 5166704
NSN 7H 4921-01-227-2433

SWL	TEST LOAD	TEST DURATION
7,200 POUNDS	14,400 POUNDS	2 MINUTES

NOTE

Perform tests No. 1, 2 and 3 for Strongback Mk 1 Mod 0.

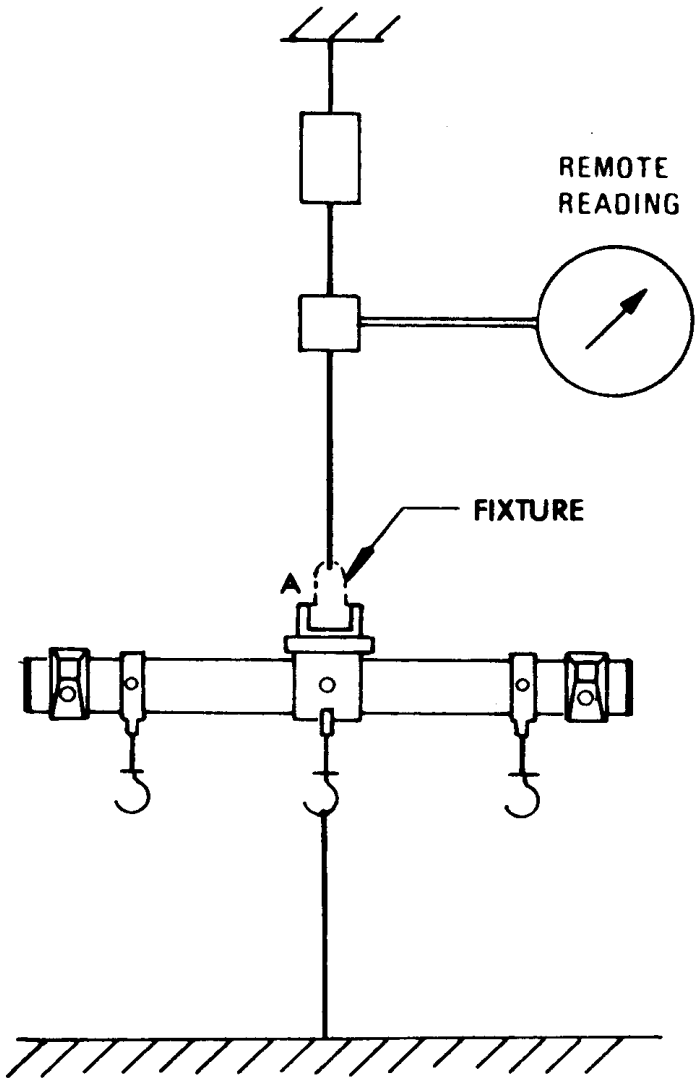

Test No. 1

FIGURE 4-157. Test Arrangement, Strongback, Mk 1 Mod 0 (Sheet 1 of 3)

STRONGBACK,
MK 1 MOD 0
DL 5166704
NSN 7H 4921-01-227-2433

SWL	TEST LOAD	TEST DURATION
7,200 POUNDS	14,400 POUNDS	2 MINUTES

NOTE

Perform tests No. 1, 2 and 3 for Strongback Mk 1 Mod 0.

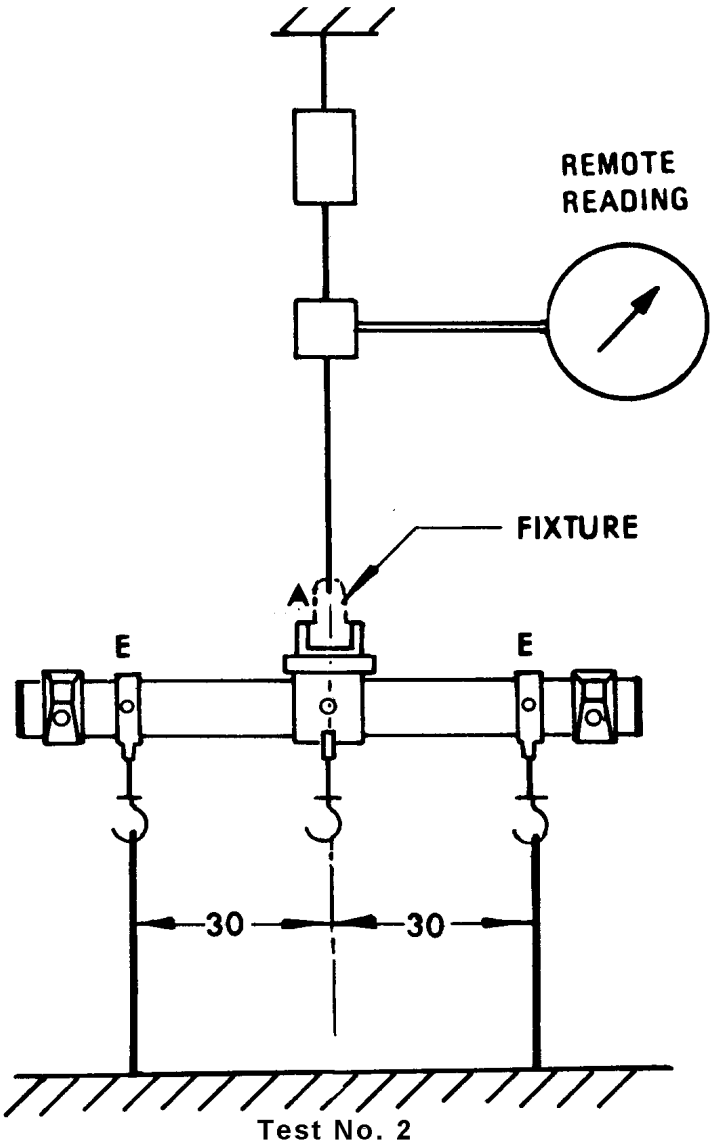

FIGURE 4-157. Test Arrangement, Strongback, MK 1 Mod 0 (Sheet 2 of 3)

STRONGBACK,
MK 1 MOD 0
DL 5166704
NSN 7H 4921-01-227-2433

SWL	TEST LOAD	TEST DURATION
6,300 POUNDS	12,600 POUNDS	2 MINUTES

Perform tests No. 1, 2 and 3 for Strongback Mk 1 Mod 0.

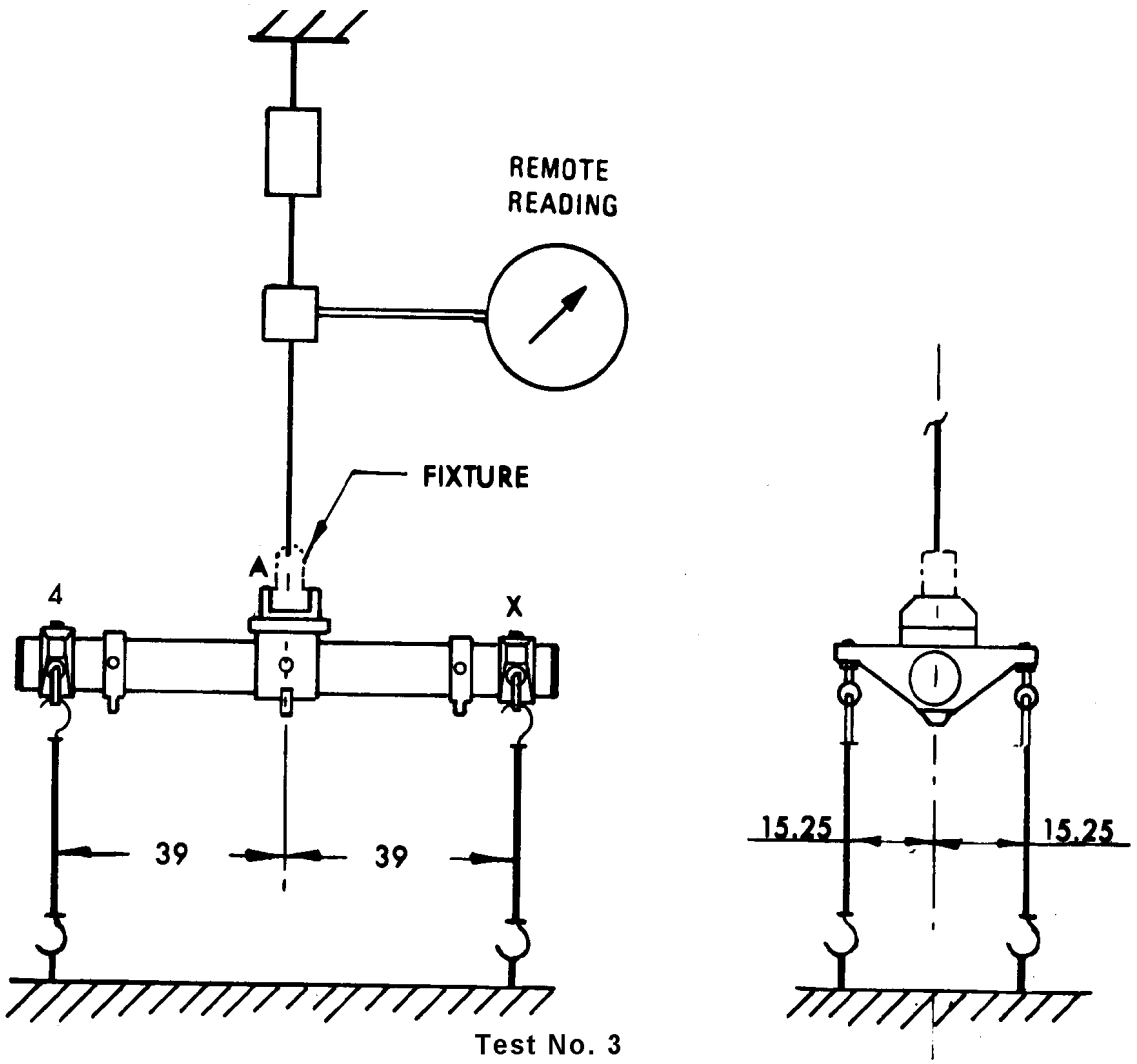

FIGURE 4-157. Test Arrangement, Strongback, Mk 1 Mod 1 (Sheet 3 of 3)

STRONGBACK,
MK 1 MOD 1
DL 6212544
NSN 7H 4921-01-287-9395

SWL	TEST LOAD	TEST DURATION
8,000 POUNDS	16,000 POUNDS	2 MINUTES

NOTE

Perform Tests No.1, 2 and 3 for Strongback Mk 1 Mod 1.

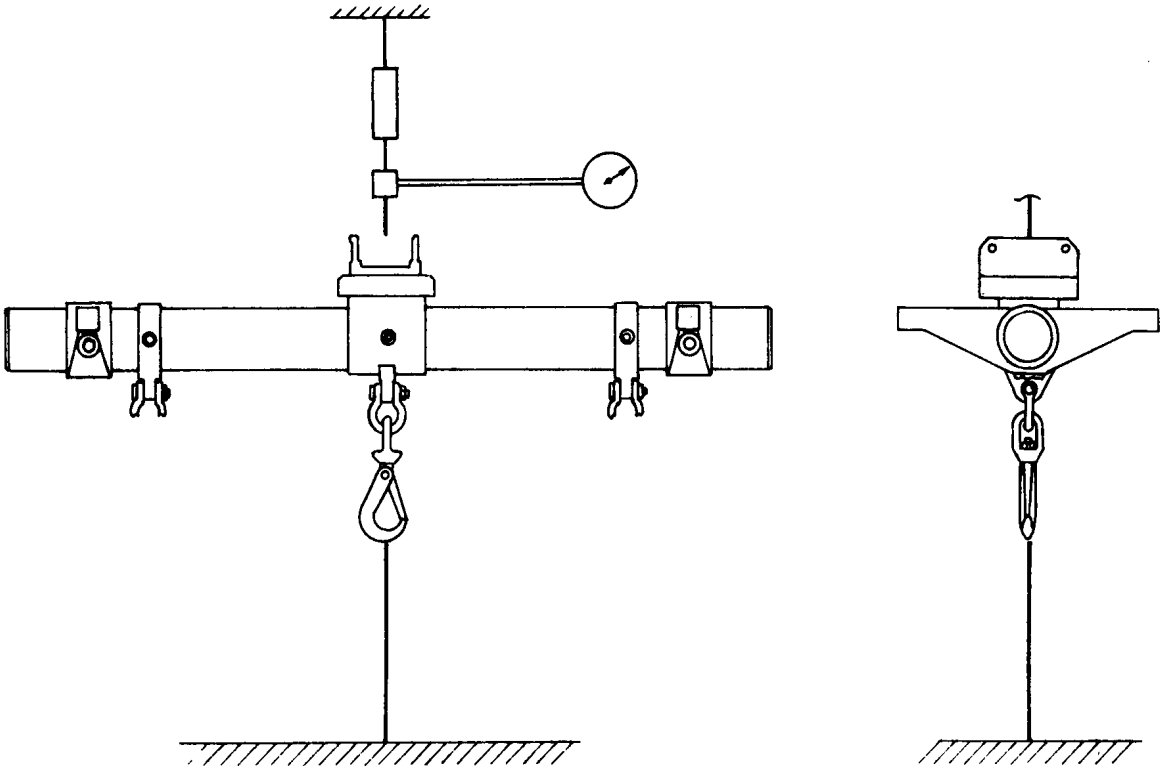

Test No. 1

FIGURE 4-158. Test Arrangement, Strongback, Mk 1 Mod 1 (Sheet 1 of 3)

STRONGBACK,
MK 1 MOD 1
DL 6212544
NSN 7H 4921-01-287-9395

SWL	TEST LOAD	TEST DURATION
8,000 POUNDS	16,000 POUNDS	2 MINUTES

NOTE

Perform Tests No.1, 2 and 3 for Strongback Mk 1 Mod 1.

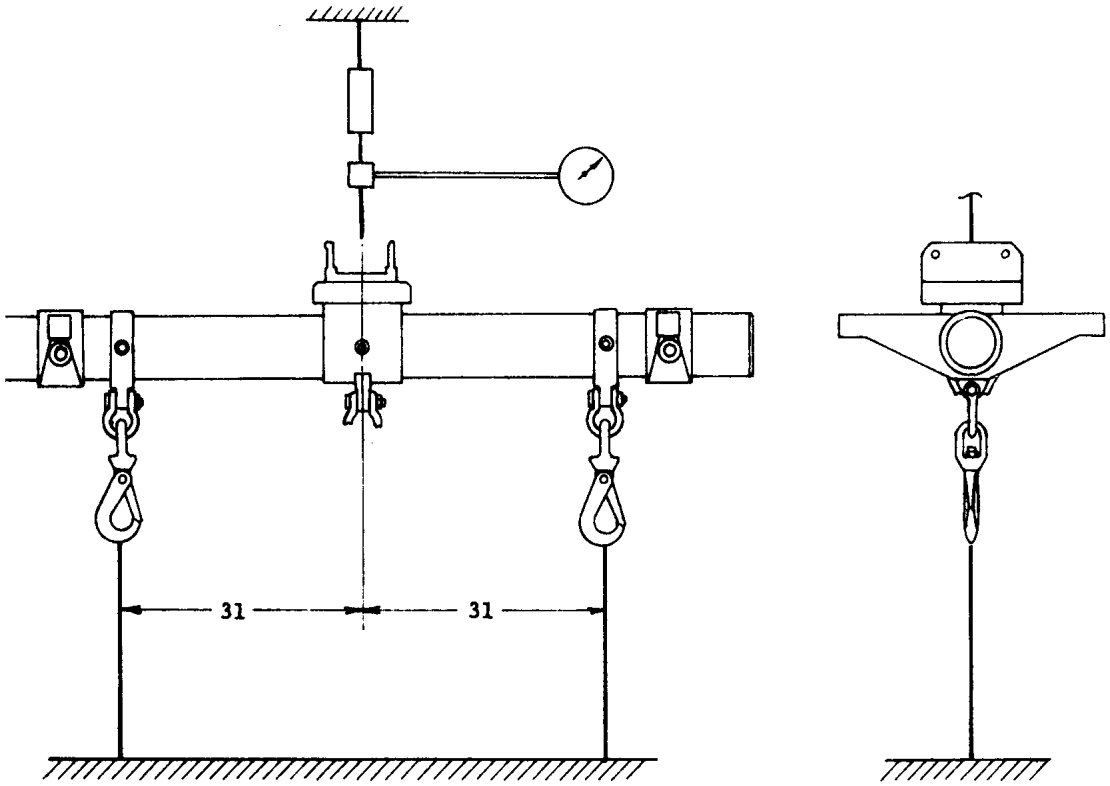

Test No. 2

FIGURE 4-158. Test Arrangement, Strongback, Mk 1 Mod 1 (Sheet 2 of 3)

STRONGBACK,
MK 1 MOD 1
DL 6212544
NSN 7H 4921-01-287-9395

SWL	TEST LOAD	TEST DURATION
8,000 POUNDS	16,000 POUNDS	2 MINUTES

NOTE

Perform Tests No.1, 2 and 3 for Strongback Mk 1 Mod 1.

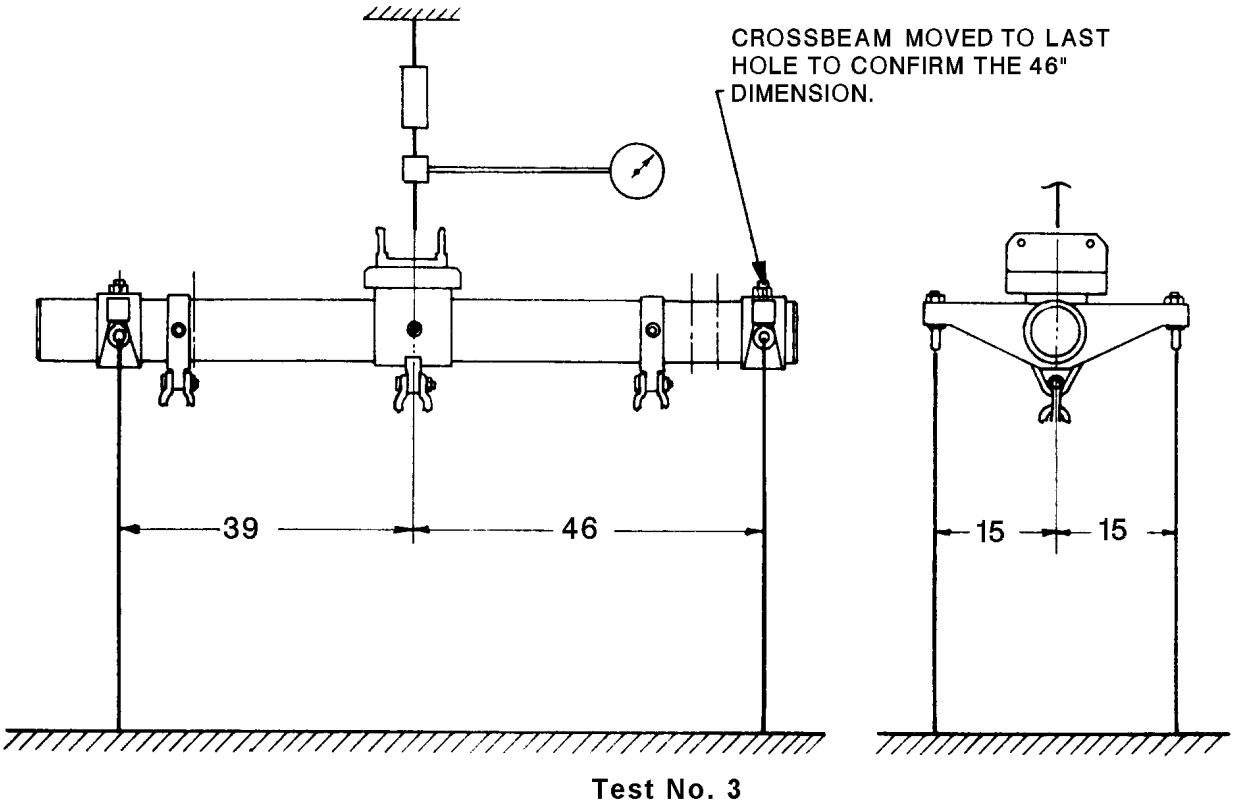

FIGURE 4-158. Test Arrangement, Strongback, Mk 1 Mod 1 (Sheet 3 of 3)

STRONGBACK, HORIZONTAL TRANSFER ASSEMBLY,
MK 3 MOD 0
PL 5598249-19
NSN 8T 1450-01-224-9644

SWL	TEST LOAD	TEST DURATION
7,550 POUNDS	15,100 POUNDS	2 MINUTES

NOTE

Refer to chapter 3 for test fixture illustration and description. "-9" variants are to be ORDALTED to "-19", contact PHST Center, Naval Surface Warfare Center, Indian Head Division, Detachment Earle for further information if needed.

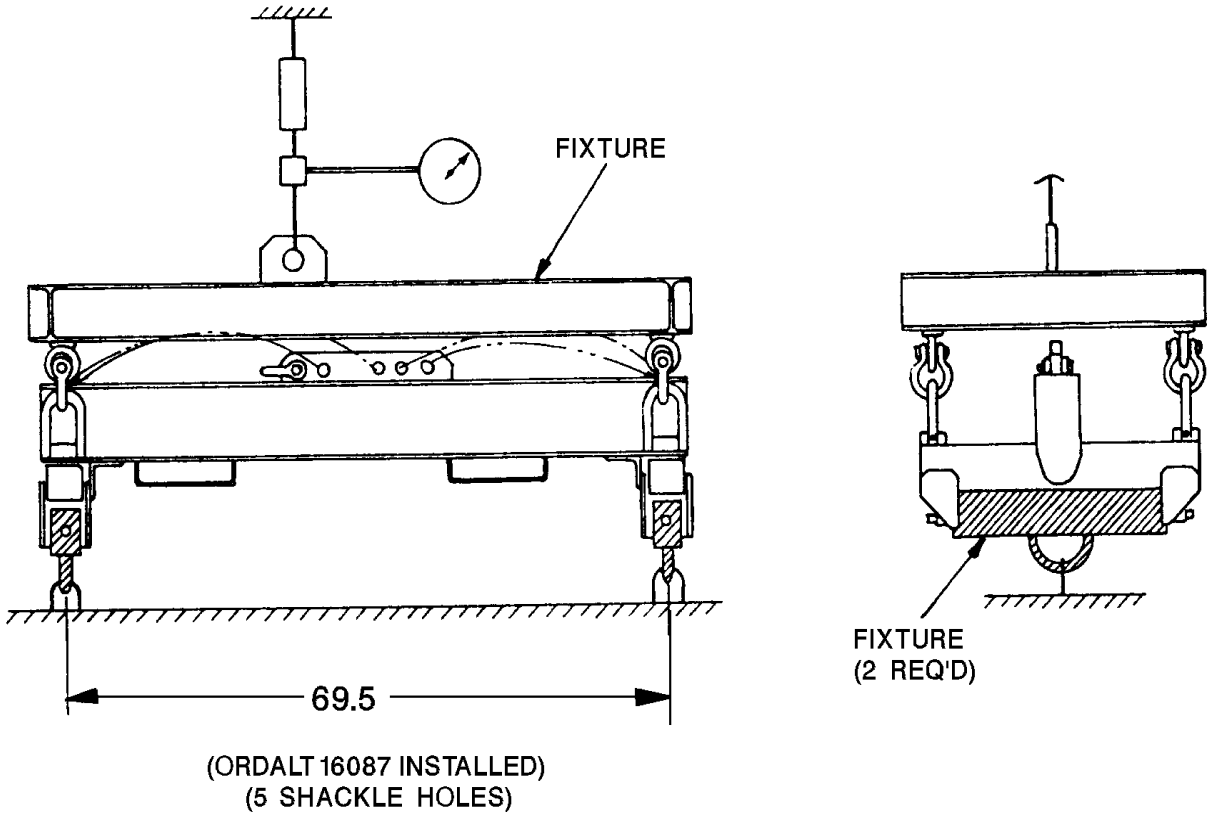

Test No. 1

FIGURE 4-159. Test Arrangement, Horizontal Transfer Assembly Strongback, Mk 3 Mod 0 (Sheet 1 of 2)

TRONGBACK, HORIZONTAL TRANSFER ASSEMBLY,
MK 3 MOD 0
PL 5598249-19
NSN 8T 1450-01-224-9644

SWL	TEST LOAD	TEST DURATION
7,550 POUNDS	15,100 POUNDS	2 MINUTES

NOTE

Refer to chapter 3 for test fixture illustration and description. "-9" variants are to be ORDALTED to "-19", contact PHST Center, Naval Surface Warfare Center, Indian Head Division, Detachment Earle for further information if needed.

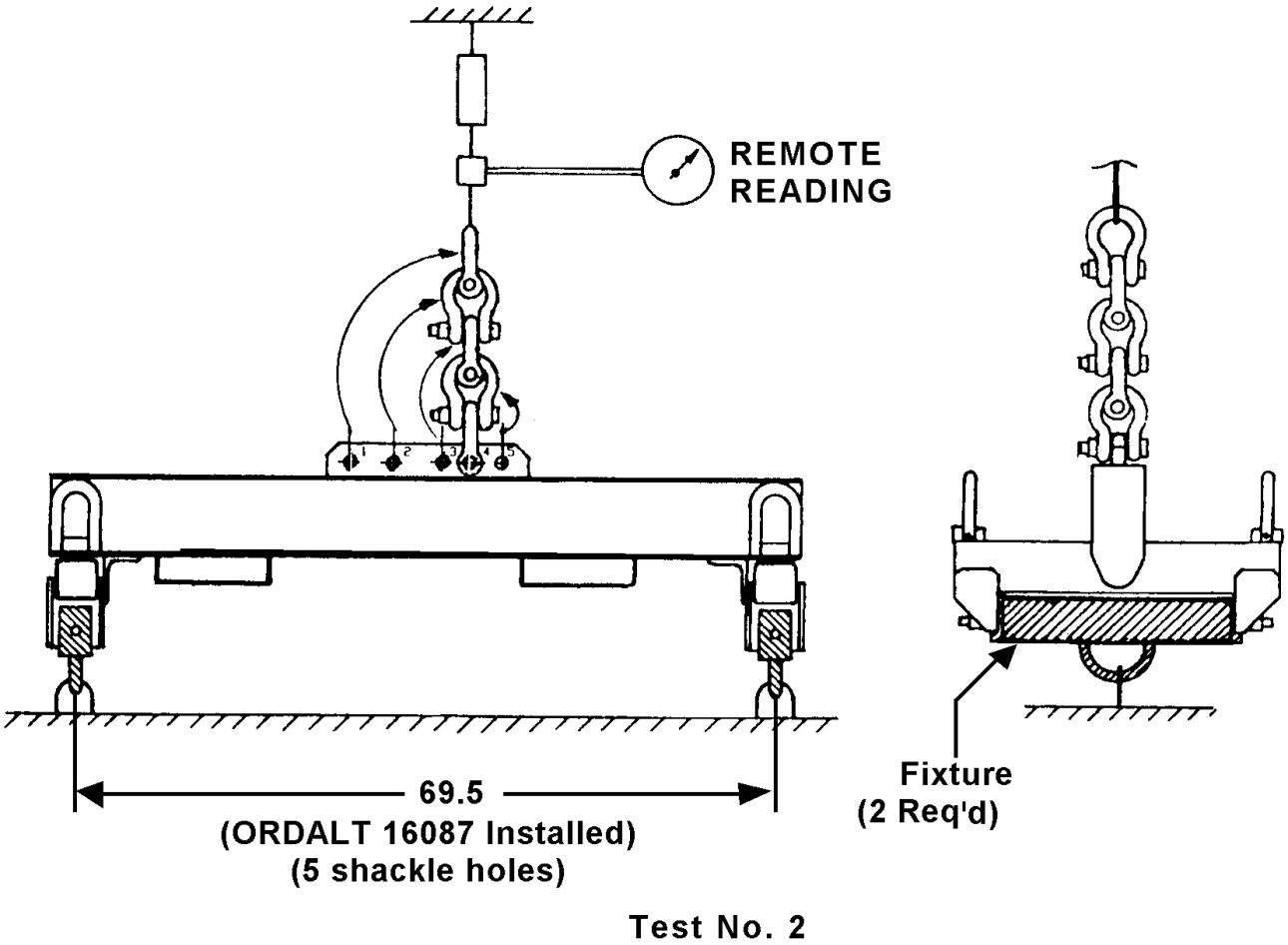

FIGURE 4-159. Test Arrangement, Horizontal Transfer Assembly Strongback, Mk 3 Mod 0 (Sheet 2 of 2)

STRONGBACK, VERTICAL ASSEMBLY,
MK 4 MOD 0
PL 5497606-19
NSN 8T 1450-01-224-9645

SWL	TEST LOAD	TEST DURATION
6,700 POUNDS	13,400 POUNDS	2 MINUTES

NOTE

Refer to chapter 3 for test fixture illustration and description.

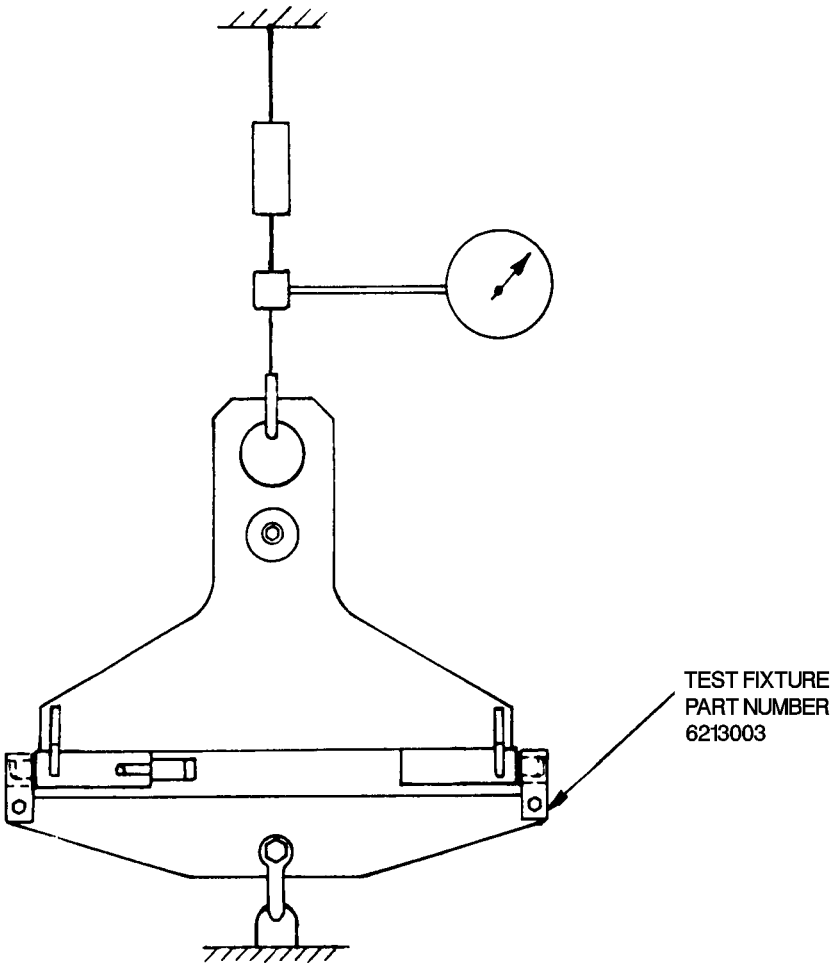

FIGURE 4-160. Test Arrangement, Vertical Assembly Strongback, Mk 4 Mod 0

STRONGBACK, CARGO, STREAM, HEAVY LIFT, (GULLWING)
MK 5 MOD 1
DL 5177023
NSN 7H 1450-01-352-7030

SWL	TEST LOAD	TEST DURATION
10,000 POUNDS	20,000 POUNDS	5 MINUTES

NOTE

Refer to chapter 3 for test fixture illustration and description.

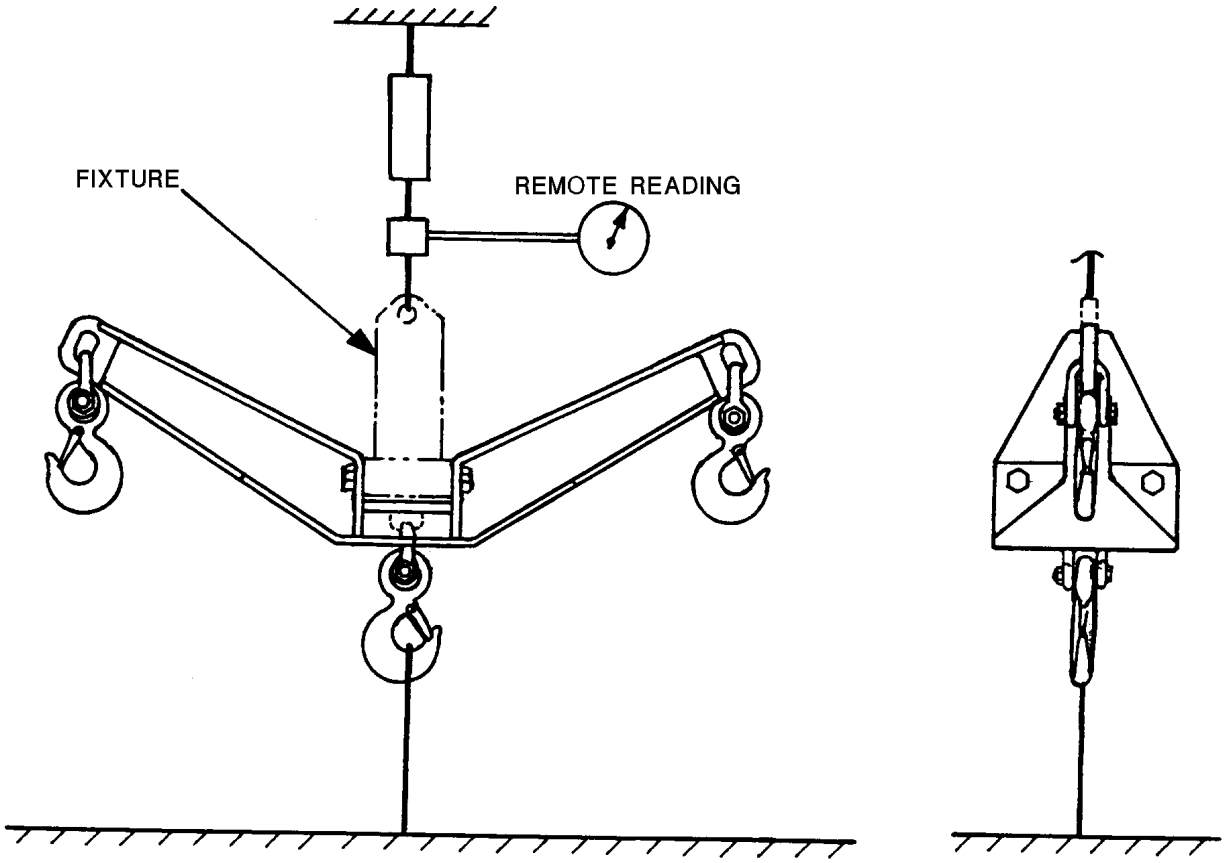

Test No. 1

FIGURE 4-161. Test Arrangement, Cargo STREAM Heavy Lift (GULLWING) Strongback, Mk 5 Mod 1 (Sheet 1 of 2)

STRONGBACK, CARGO, STREAM, HEAVY LIFT, (GULLWING)
MK 5 MOD 1
DL 5177023
NSN 7H 1450-01-352-7030

SWL	TEST LOAD	TEST DURATION
10,000 POUNDS	20,000 POUNDS	5 MINUTES

NOTE

Refer to chapter 3 for test fixture illustration and description.

Apply 10,000 pounds per arm as illustrated.

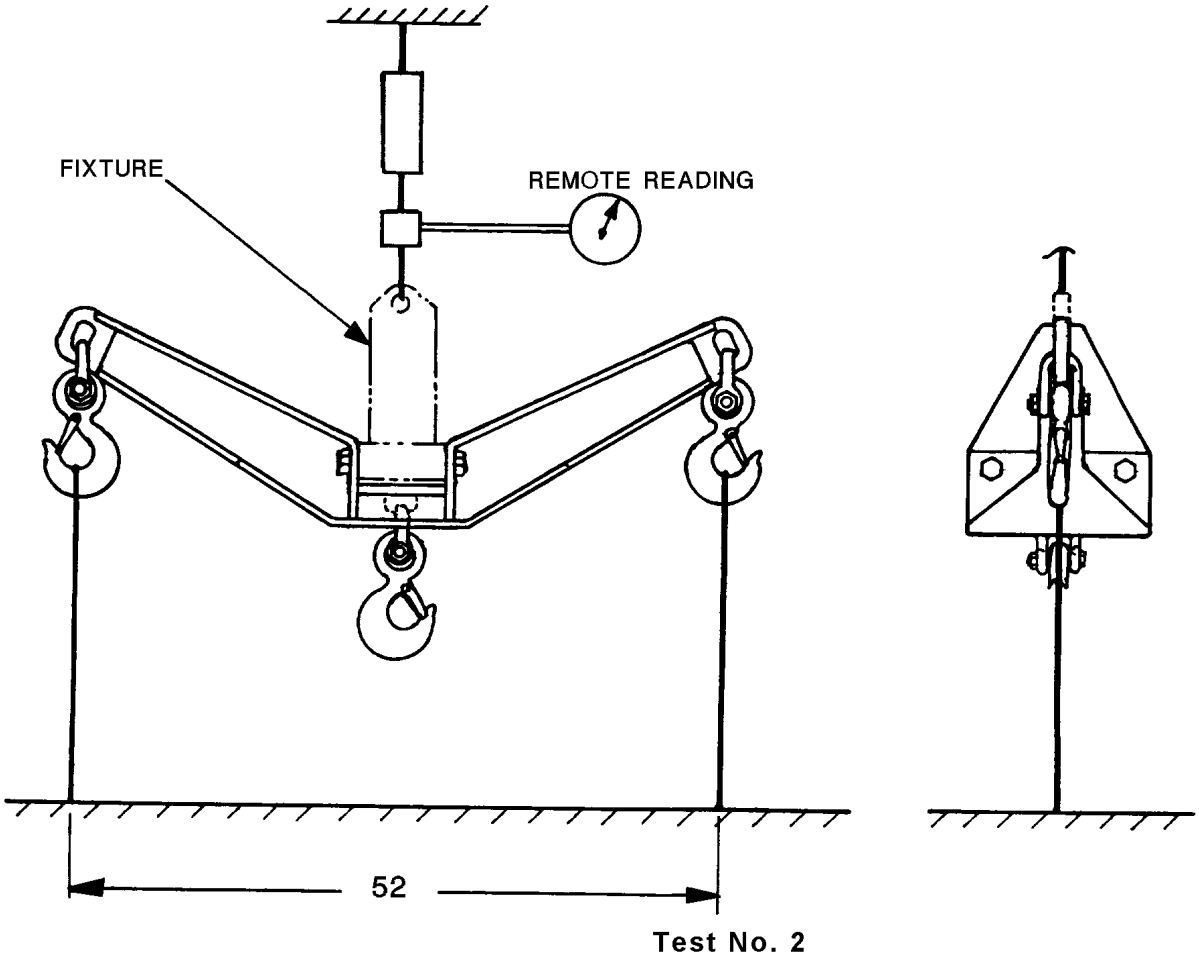

FIGURE 4-161. Test Arrangement, Cargo STREAM Heavy Lift (GULLWING) Strongback, Mk 5 Mod 1 (Sheet 2 of 2)

STRONGBACK, VERTICAL ASSEMBLY
MK 6 MOD 0
PL 711600-9
NSN 8T 1450-01-464-9281

SWL	TEST LOAD	TEST DURATION
6,700 POUNDS	13,400 POUNDS	2 MINUTES

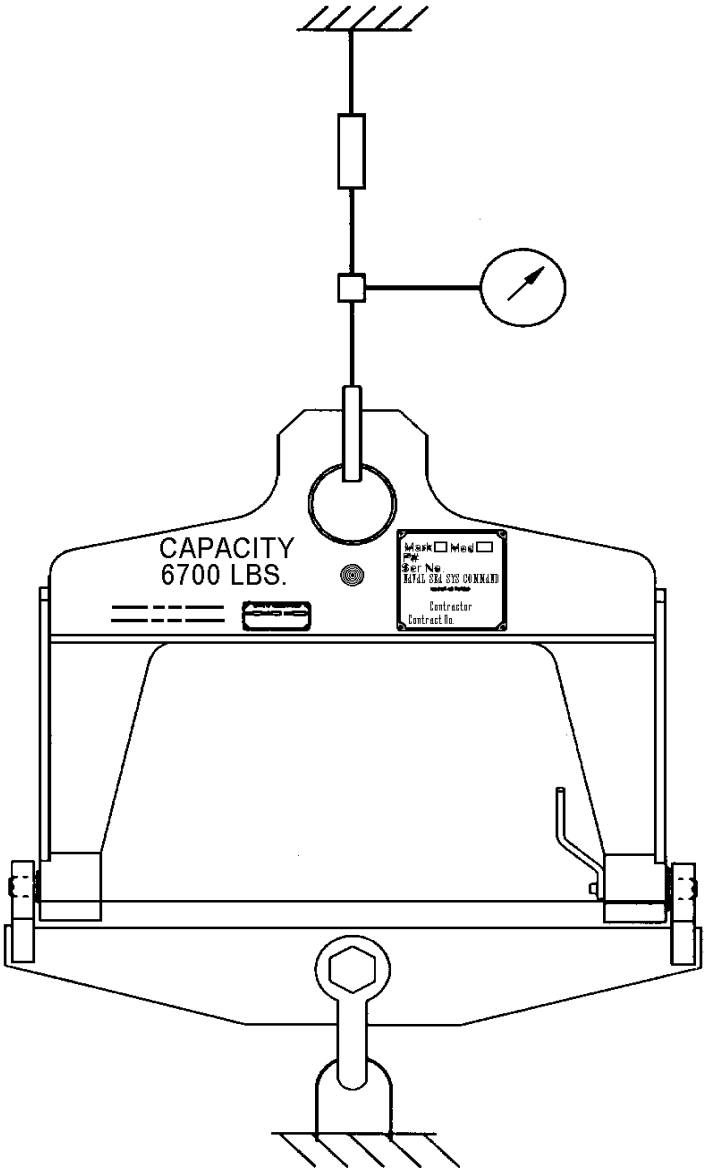

FIGURE 4-162. Test Arrengement Vertical Assembly Strongback, Mk 6 Mod 0

Section XI

MISCELLANEOUS

4-12. GENERAL

Miscellaneous ordnance handling equipment (e.g. connectors, becket rope, pallet-net cargo and straps) requiring testing are listed in table 4-11 with cross reference to their drawing/ DL/LD numbers; test arrangement figure number; maintenance index page (MIP) number/ Intermediate and Depot Maintenance Instructions, OR-99/XXXXXXX; weight, rated SWL; applied test load and test duration of items used both ashore and aboard ship. Prior to testing, each ordnance handling equipment shall be visually inspected to locate obvious defects that would be cause for rejection, thus preventing the occurrence of a dangerous situation resulting from failure during testing. Accessory fittings and hardware that do not comply with applicable drawings or specifications or loose or missing parts shall be cause for rejection. Before, during and after testing ordnance handling equipment, the precautions in paragraphs 2-5.1, 2-5.2 and 2-5.3 shall be observed.

Table 4-11. Quick Reference Data, Miscellaneous

ITEM NOMENCLATURE	DRAWING OR DL/LD	FIGURE NO.	MIP NO. OR OR-99/	ITEM WEIGHT (LBS)	SAFE WORKING LOAD (LBS)	TEST LOAD (LBS)	TEST DURATION (MIN.)
Becket, Rope	Dwg 2644458	4-163	8-213	1	4,500	9,000	5
Connector, Mk 51 Mod 0	DL 5166736	4-164	7221/R50	48	3,000	6,000	2
Device, Lifting, Battery (MMC 1D00011)	P/N 1798261	4-165			275	330	2
Device, Lifting, Tailcone (MMC 1D00012	P/N 1803503	4-166			315	378	2
Pallet Net, Cargo, Mk 16 Mod 0	DL 2644461	4-167	7721/R30	220	4,000	8,000	5
Ring Assembly, Lifting (MMC1R00540)	Dwg 2869934	4-168			1,800	3,600	2
Stand, Cell Maintenance	PL 5599844-9	4-169	7211/R15	21.6	*350 #136	420 272	2 2
Strap, Hoisting, H869	Dwg 320255	4-170			250	500	5
Stand, Assembly, Mk 124 Mod 0	DL 6213659	4-171 (1) 4-171 (2)	86JD000	198	180	*324 #225	2 2
Tool, Puller, Motor (MMC 7P00005)	P/N 1155667	4-172			235	282	2
Lifting Device Gas Generator	JCM-17350	4-173		30	210	420	2
Assembly, Cargo Hoister, Mk 20 Mod 0	Dwg 563891	4-174	7721/R25	94	10,000	20,000	2
Manipulator, Dalmec		4-175			90	119	2

* Test No. 1

\# Test No. 2

NOTE: Test frequency columns have been deleted in accordance with paragraph 4-1.

Table 4-11. Quick Reference Data, Miscellaneous

ITEM NOMENCLATURE	DRAWING OR DL/LD	FIGURE NO.	MIP NO. OR OR-99/	ITEM WEIGHT (LBS)	SAFE WORKING LOAD (LBS)	TEST LOAD (LBS)	TEST DURATION (MIN.)
Tool, Gas Generator Lifting	Dwg 6277128	4-176			125	250	2
Harness Assembly Torpedo Mounted Dispenser	Dwg 3237681	4-177	7521/R18	5.00	350	700	2
Harness Assembly Container Mk 594	Dwg 3246022	4-178	7521/R18	5.00	400	800	2

* Test No. 1

Test No. 2

NOTE: Test frequency columns have been deleted in accordance with paragraph 4-1.

BECKET, ROPE
DWG 2644458
NSN 9Z 3940-01-053-2557

SWL	TEST LOAD	TEST DURATION
4,500 POUNDS	9,000 POUNDS	5 MINUTES

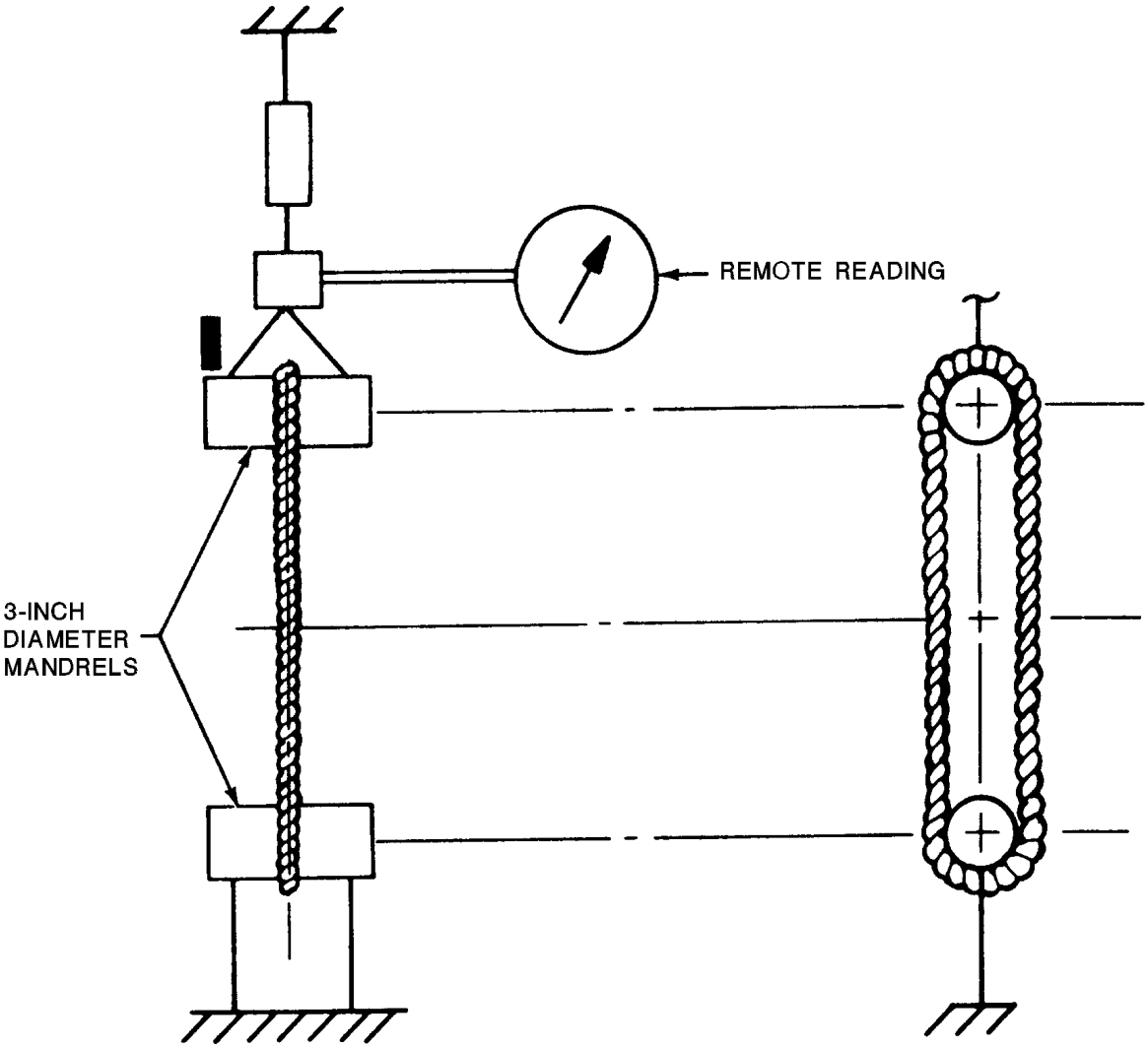

FIGURE 4-163. Test Arrangement, Rope Becket

CONNECTOR,
MK 51 MOD 0
DL 5166736
NSN 1H 1055-01-169-9048

SWL	TEST LOAD	TEST DURATION
3,000 POUNDS	6,000 POUNDS	2 MINUTES

NOTE

Refer to chapter 3 for test fixture illustration and description.

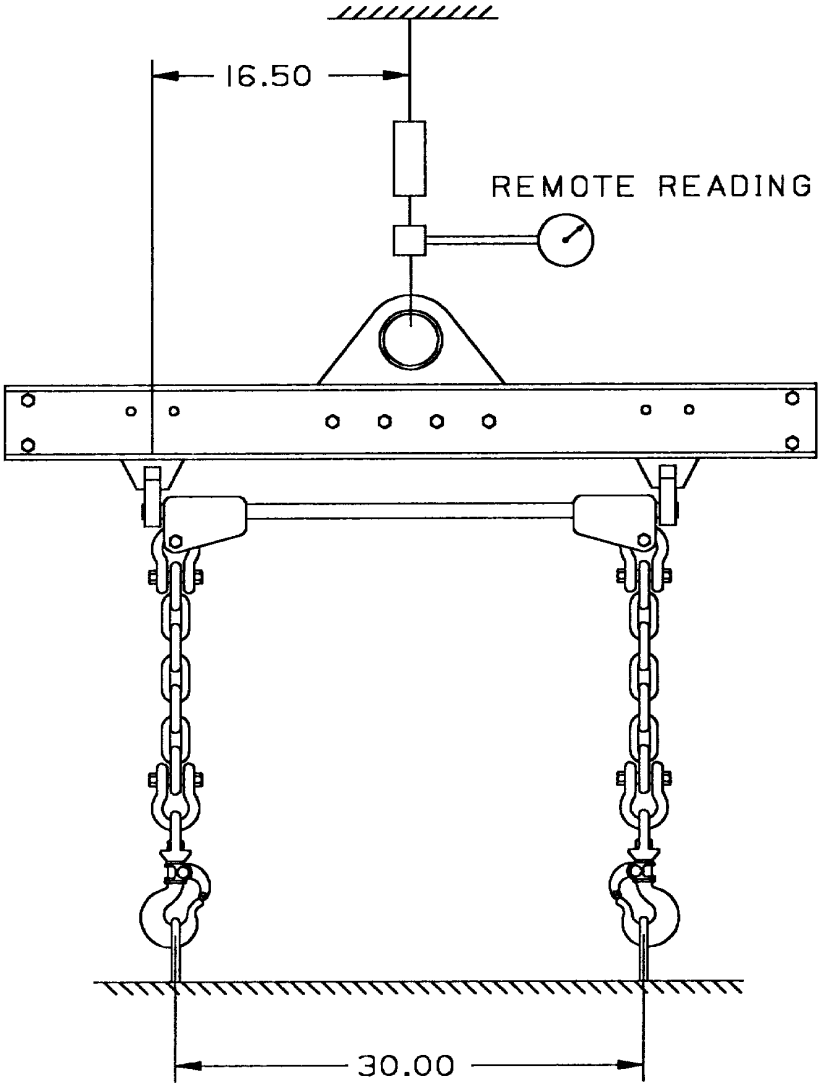

FIGURE 4-164. Test Arrangement, Connector, Mk 51 Mod 0

DEVICE, LIFTING, BATTERY
(MMC 1D00011)
P/N 1798261
NSN 7H 4921-00-735-4717

SWL	TEST LOAD	TEST DURATION
275 POUNDS	330 POUNDS	2 MINUTES

NOTE

Refer to chapter 3 for test fixture illustration and description.

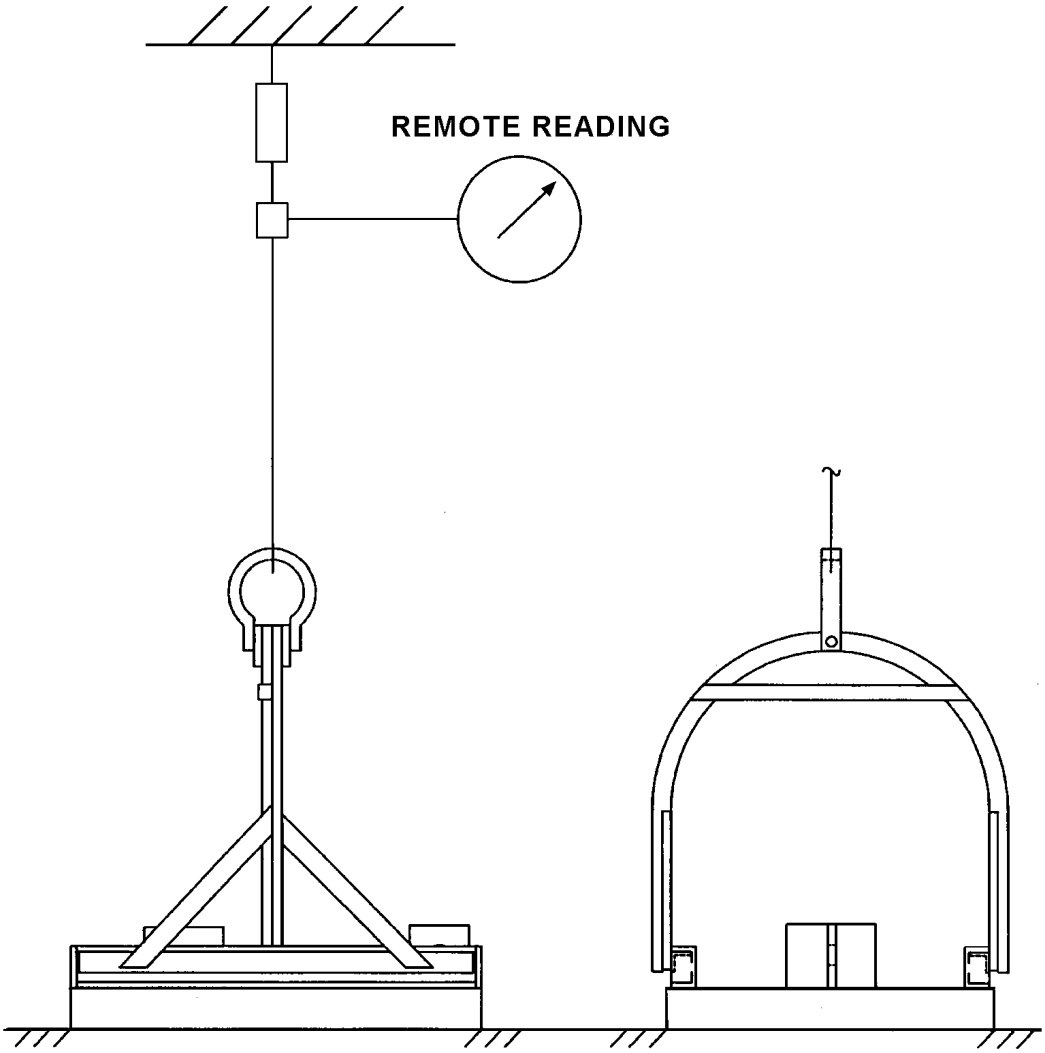

FIGURE 4-165. Test Arrangement, Battery Lifting Device

DEVICE, LIFTING, TAILCONE
(MMC 1D00012)
P/N 1803503
NSN 9C 4921-00-446-2752

SWL	TEST LOAD	TEST DURATION
315 POUNDS	378 POUNDS	2 MINUTES

NOTE

Refer to chapter 3 for test fixture illustration and description.

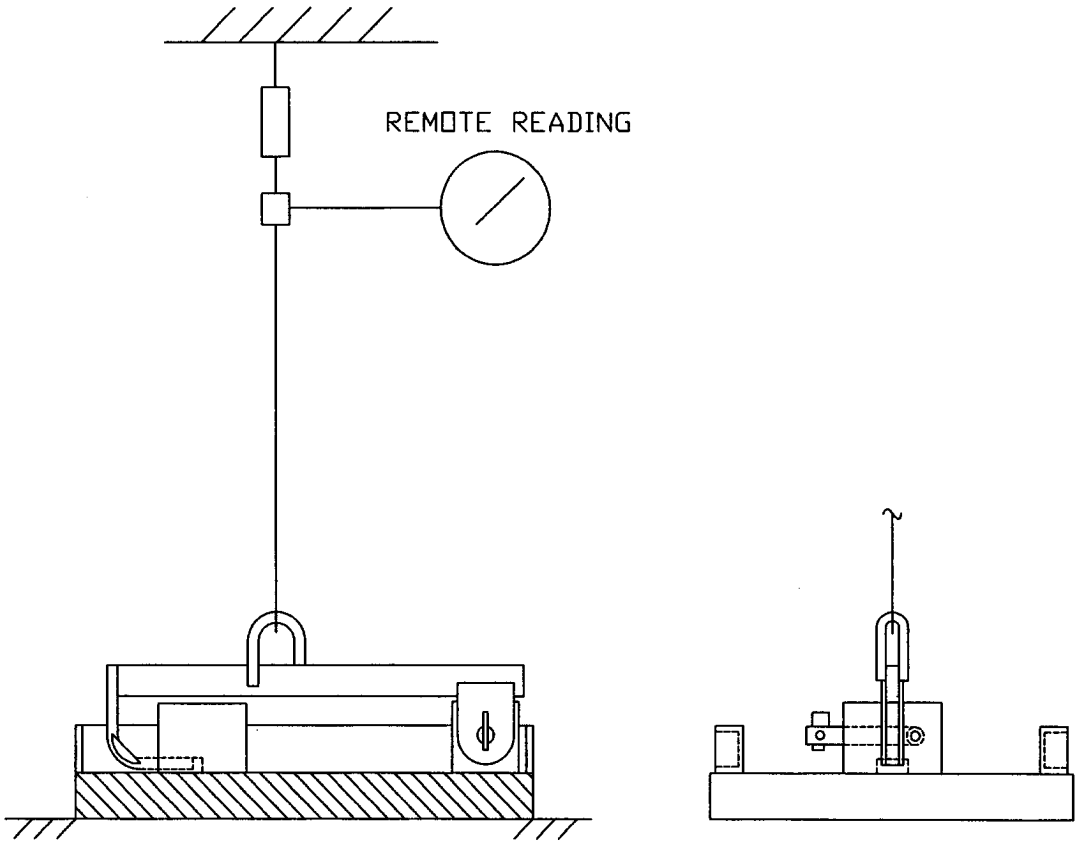

FIGURE 4-166. Test Arrangement, Tailcone Lifting Device

PALLET-NET, CARGO,
MK 16 MOD 0
DL 2644461
NSN 9Z 3940-00-514-1198

SWL	TEST LOAD	TEST DURATION
4,000 POUNDS	8,000 POUNDS	5 MINUTES

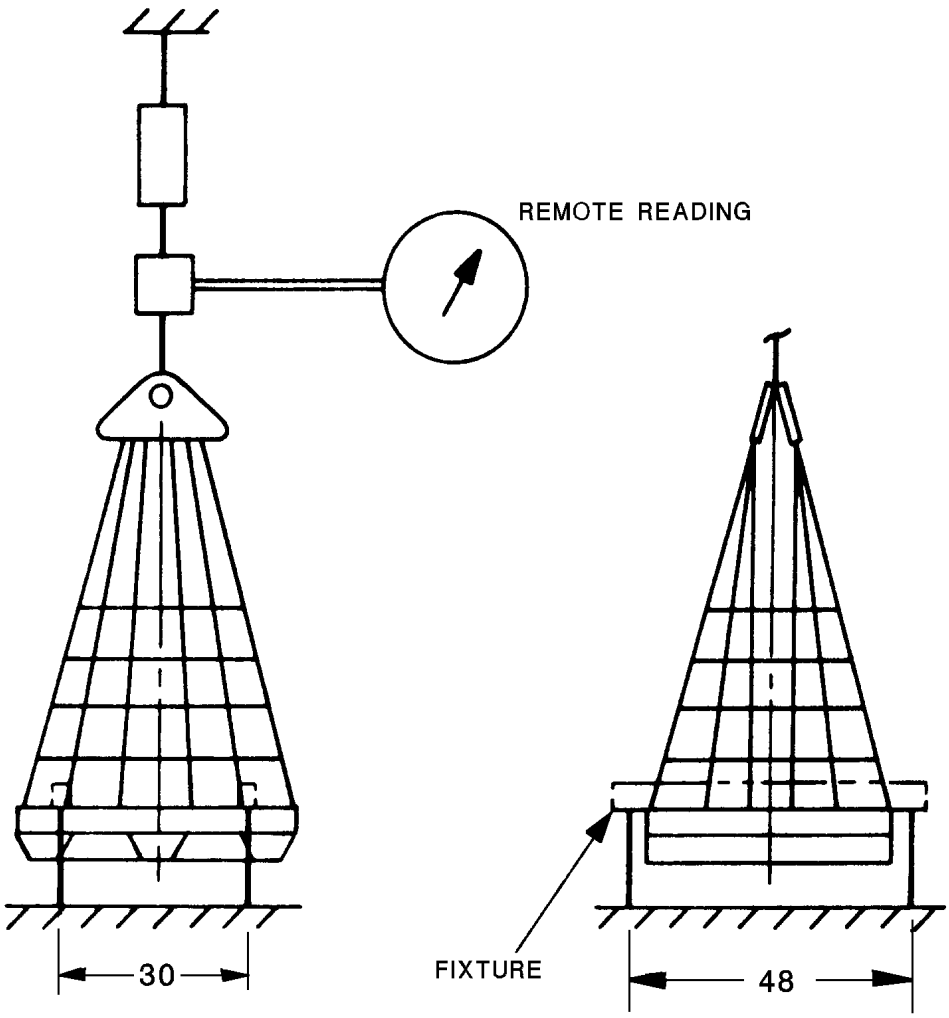

FIGURE 4-167. Test Arrangement, Cargo Pallet-Net, Mk 16 Mod 0

RING ASSEMBLY, LIFTING
(MMC 1R00540)
DWG 2869934
NSN 1H 1350-00-475-8491

SWL	TEST LOAD	TEST DURATION
1,800 POUNDS	3,600 POUNDS	2 MINUTES

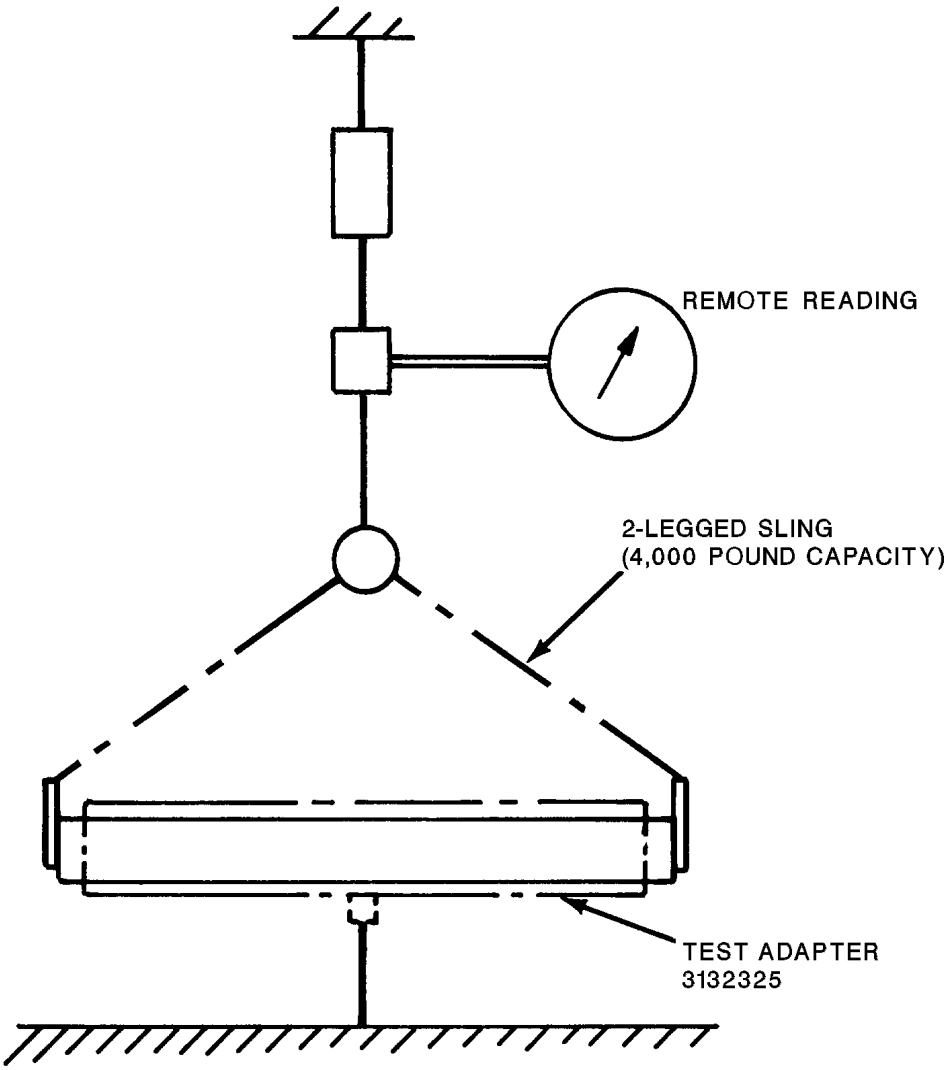

FIGURE 4-168. Test Arrangement, Lifting Ring Assembly (MMC 1R00540)

STAND, CELL MAINTENANCE
PL 5599844-9
NSN 9N 4935-01-294-9843

TEST NO.	SWL	TEST LOAD	TEST DURATION
1	350 POUNDS	420 POUNDS	2 MINUTES
2	136 POUNDS	272 POUNDS	2 MINUTES

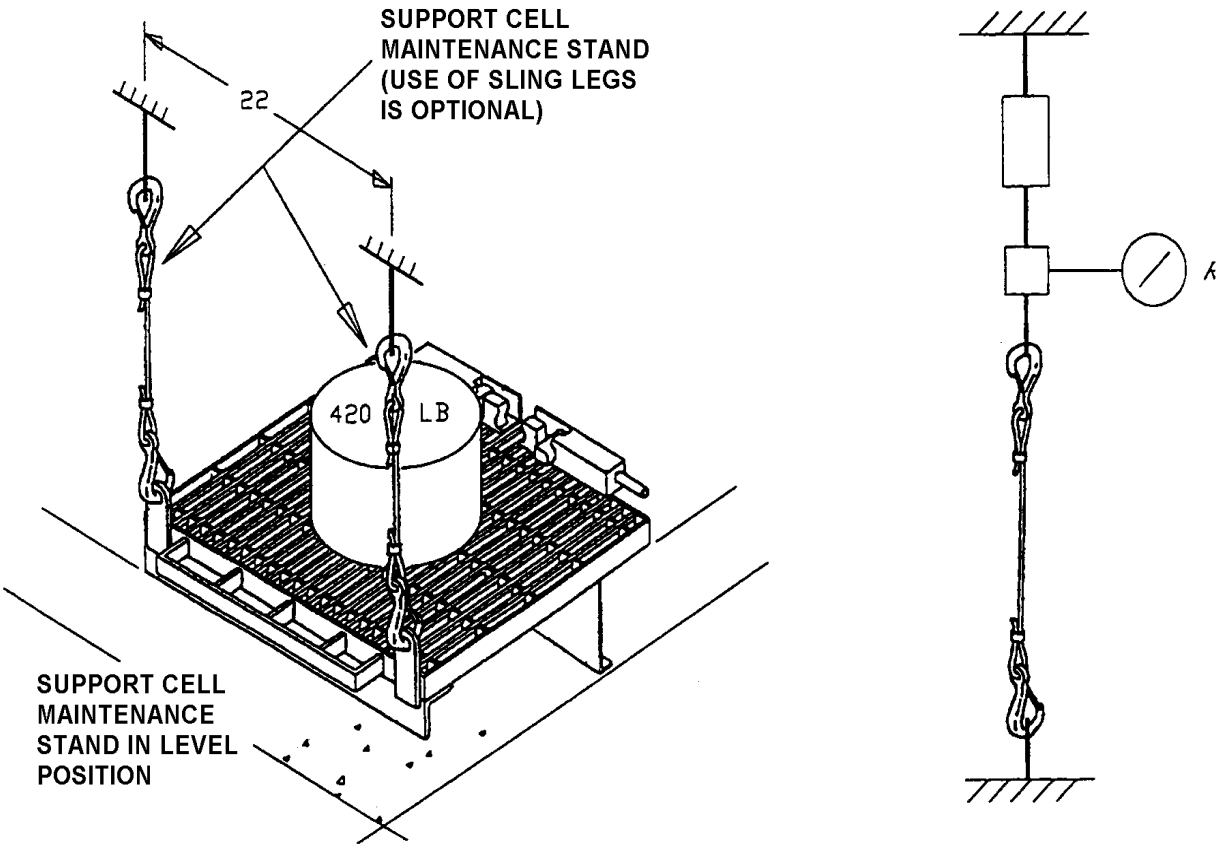

TEST # 1 **TEST # 2**

FIGURE 4-169. Test Arrangement, Cell Maintenance Stand

STRAP, HOISTING, H869
DWG 320255
NSN 8A 1190-00-941-8264

SWL	TEST LOAD	TEST DURATION
250 POUNDS	500 POUNDS	5 MINUTES

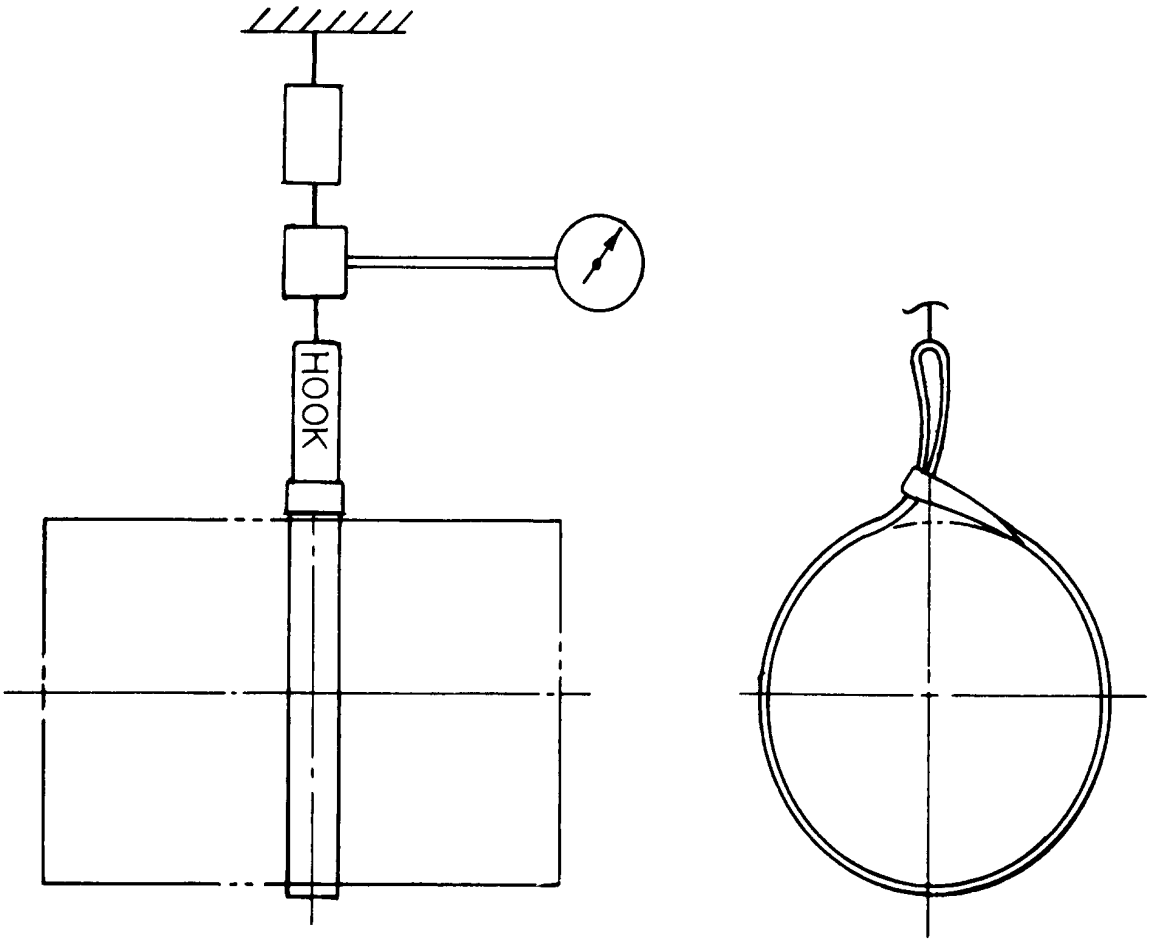

FIGURE 4-170. Test Arrangement, Hoisting Strap, H869

STAND, ASSEMBLY
MK 124 MOD 0
DL 6213659
NSN 8T 4934-01-422-4524

SWL	TEST LOAD	TEST DURATION
180 POUNDS	324 POUNDS	2 MINUTES

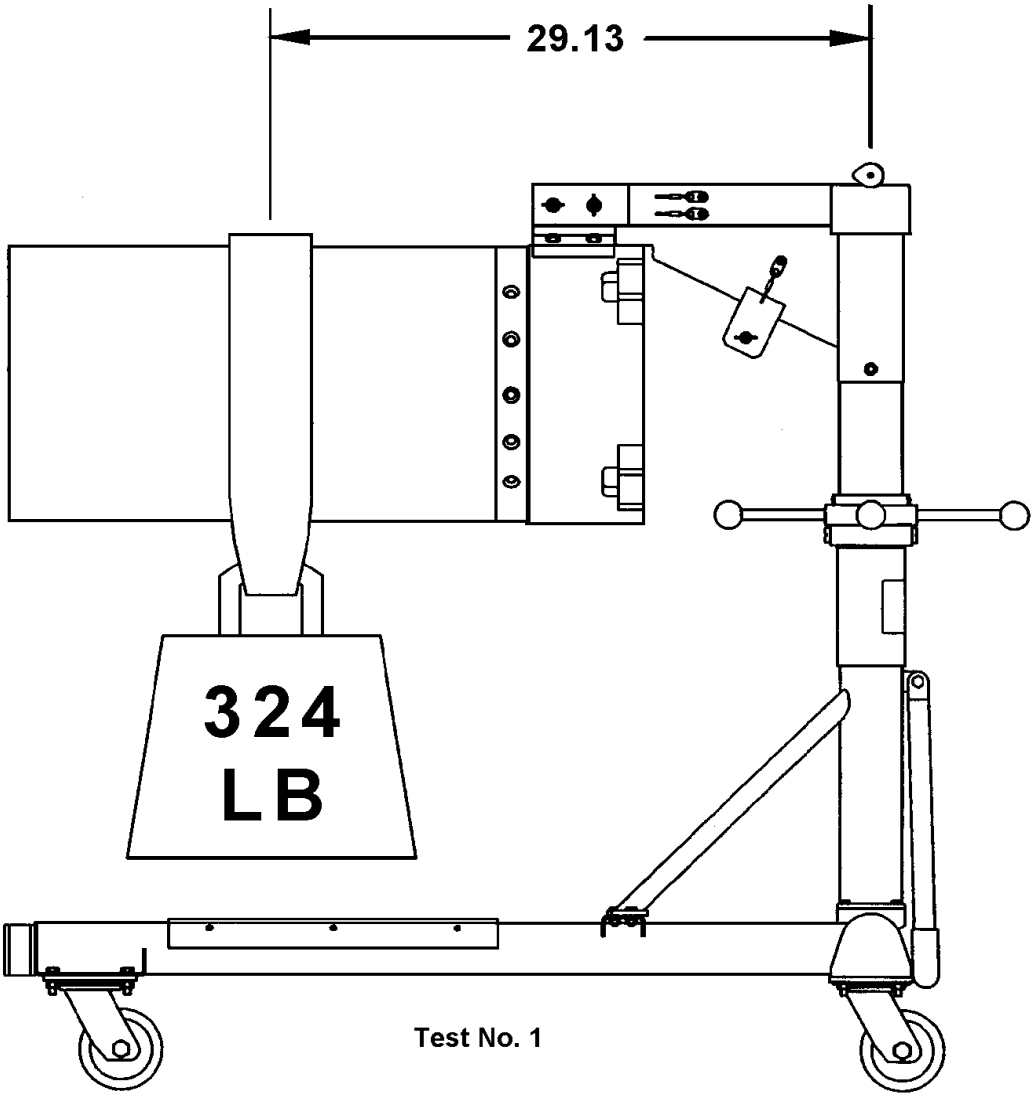

FIGURE 4-171. Test Arrangement, Stand, Assembly, Mk 124 Mod 0 (Sheet 1 of 2)

STAND, ASSEMBLY
MK 124 MOD 0
DL 6213659
NSN 8T 4935-01-422-4524

SWL	TEST LOAD	TEST DURATION
180 POUNDS	225 POUNDS	2 MINUTES

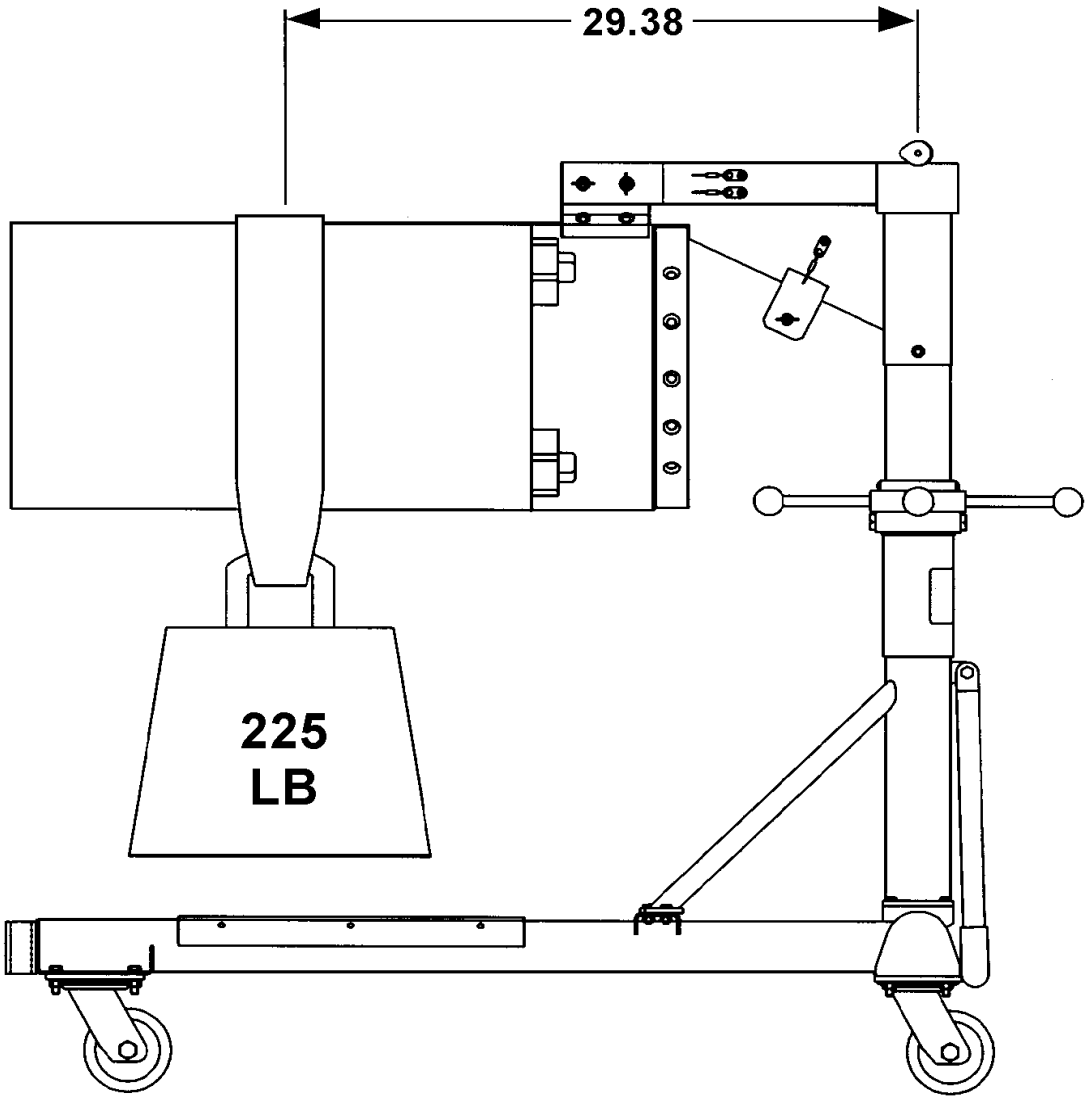

FIGURE 4-171. Test Arrangement, Stand, Assembly, Mk 124 Mod 0 (Sheet 2 of 2)

TOOL, PULLER, MOTOR
(MMC 7P00005)
P/N 1155667
NSN 1H 4921-00-573-8797

SWL	TEST LOAD	TEST DURATION
235 POUNDS	282 POUNDS	2 MINUTES

NOTE
Refer to chapter 3 for test fixture illustration and description.

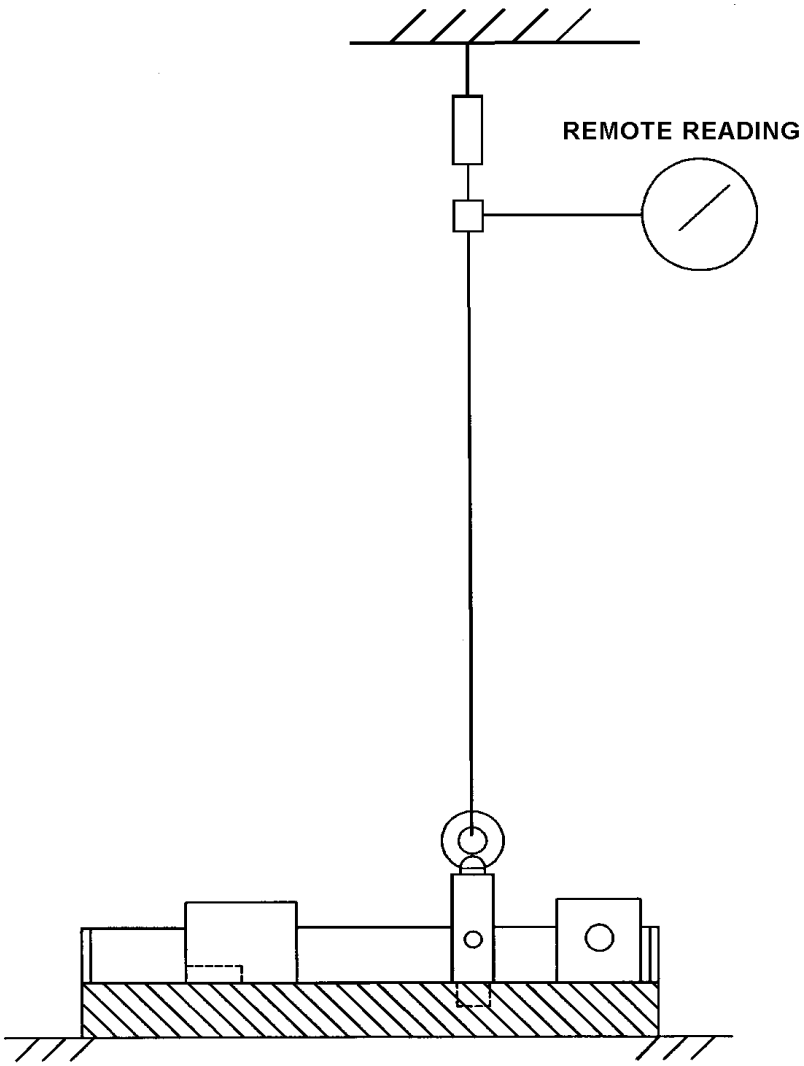

FIGURE 4-172. Test Arrangement, Motor Puller Tool

DEVICE, LIFTING, GAS GENERATOR
JCM-17350
NSN TO BE ASSIGNED

TEST NO.	SWL	TEST LOAD	TEST DURATION
1	210 POUNDS	420 POUNDS	2 MINUTES
2	210 POUNDS	420 POUNDS	2 MINUTES

NOTE

Refer to chapter 3 for test fixture illustration and description.

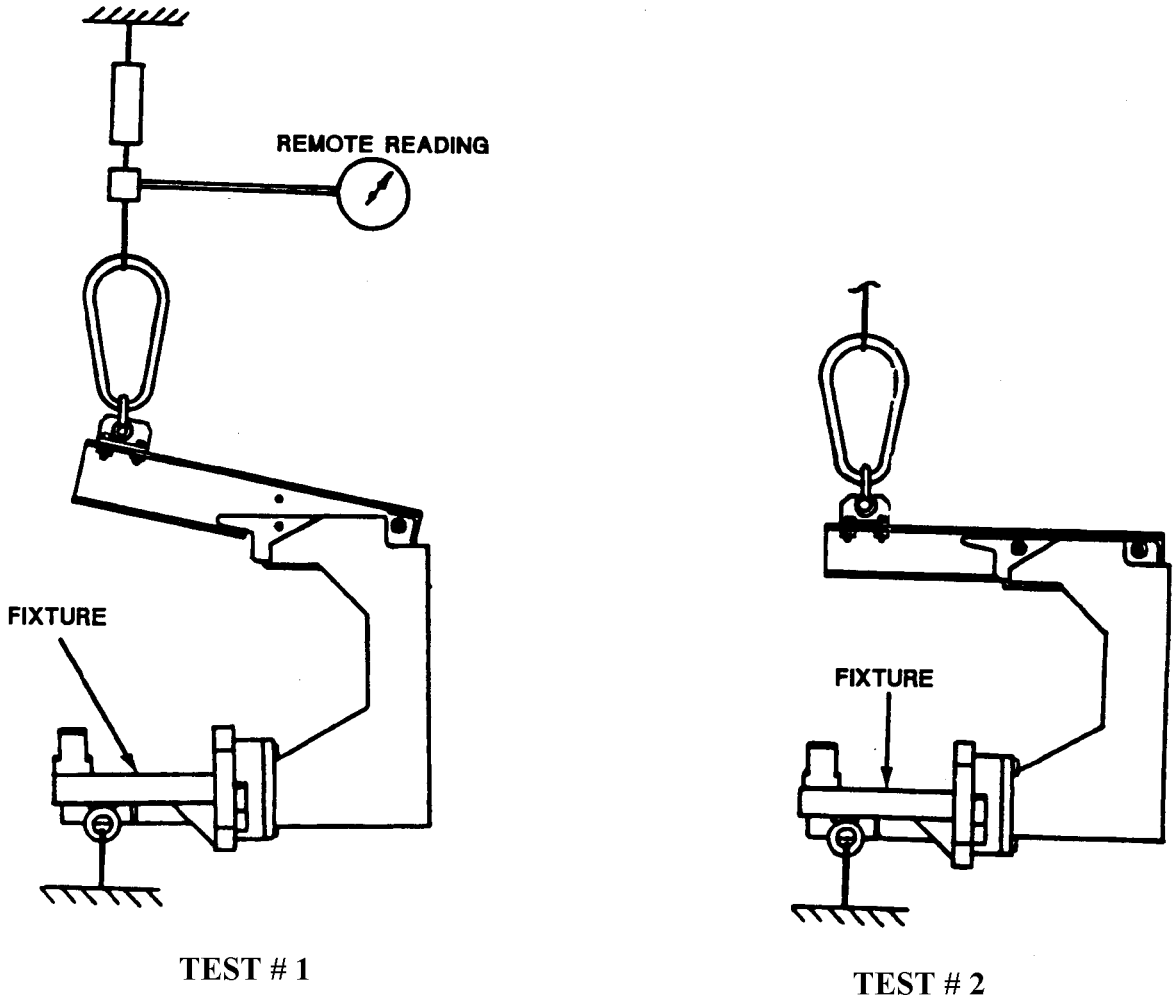

FIGURE 4-173. Test Arrangement, Gas Generator, Lifting Device

ASSEMBLY, CARGO, HOISTER
MK 20 MOD 0
DWG 563891
NSN 3G 4030-01-373-5083

SWL	TEST LOAD	TEST DURATION
10,000 POUNDS	20,000 POUNDS	2 MINUTES

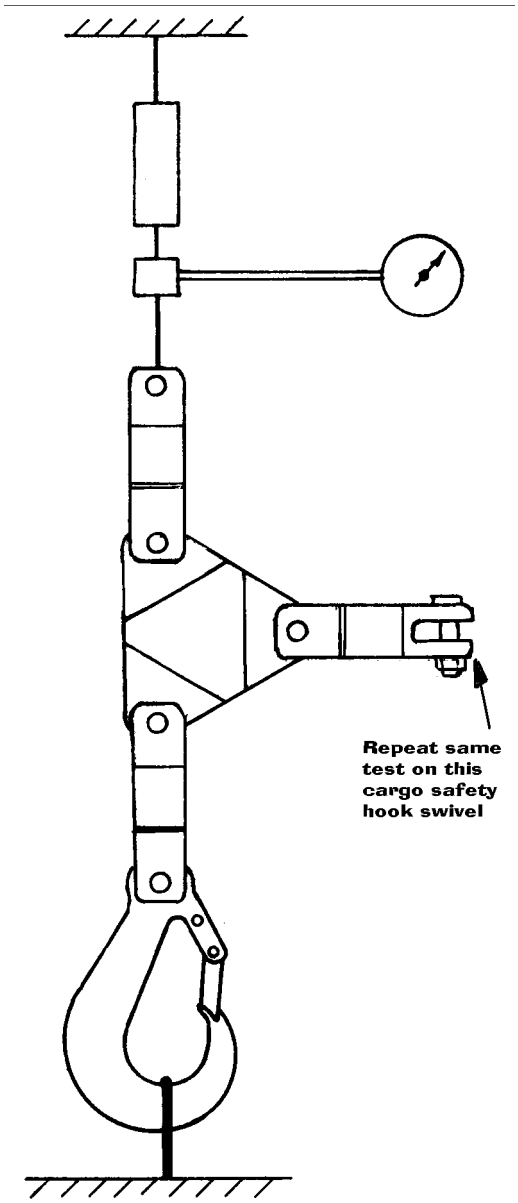

FIGURE 4-174. Test Arrangement, Cargo Hoister Assembly, Mk 20 Mod 0

MANIPULATOR, DALMEC
P/N NOT ASSIGNED
NSN -TO BE ASSIGNED

SWL	TEST LOAD	TEST DURATION
90 POUNDS	119 POUNDS	2 MINUTES

NOTE

Perform test by hanging dead weight from hook with arm at maximum extension.

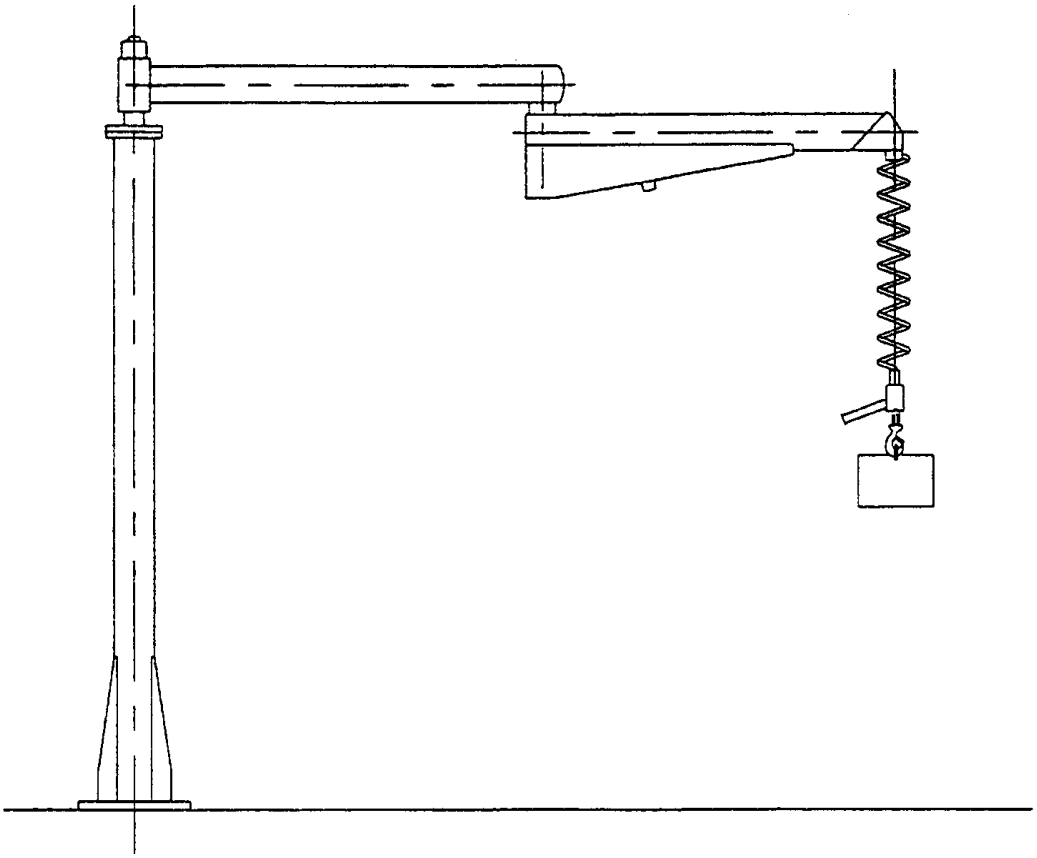

FIGURE 4-175. Test Arrangement, Manipulator DALMEC

TOOL, GAS GENERATOR LIFTING
NAVSEA DRAWING 6277128
NSN - NOT ASSIGNED

SWL	TEST LOAD	TEST DURATION
125 POUNDS	250 POUNDS	2 MINUTES

NOTE

Refer to chapter 3 for test fixture illustration and description.

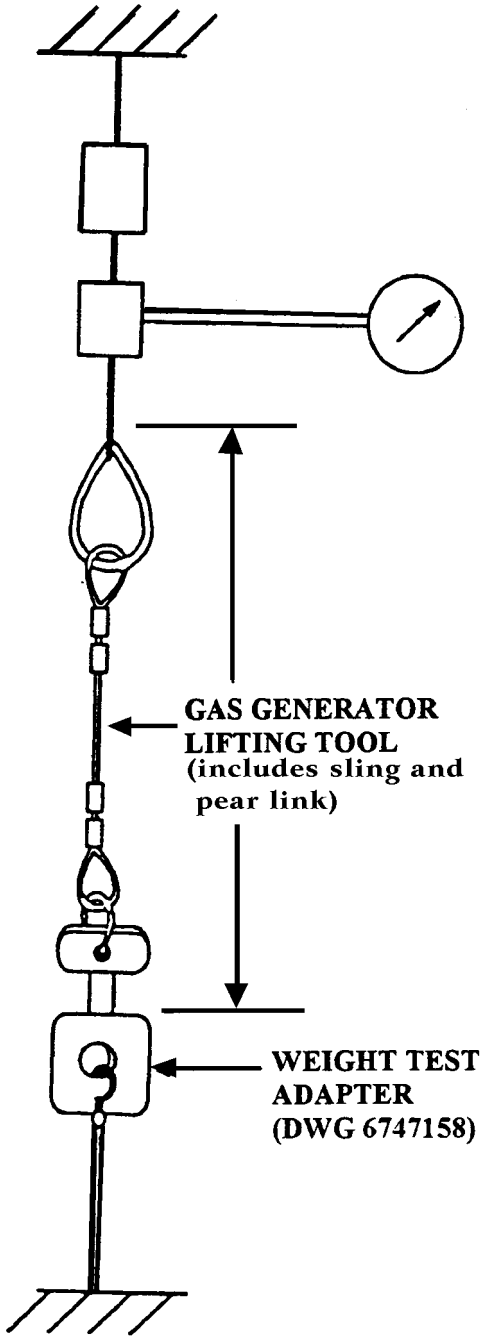

FIGURE 4-176. Test Arrangement, Gas Generator Lifting Tool

HARNESS ASSEMBLY TORPEDO MOUNTED DISPENSER
NAVSEA DRAWING 3237681
NSN 9Z 3940-01-024-1758

SWL	TEST LOAD	TEST DURATION
350 POUNDS	700 POUNDS	2 MINUTES

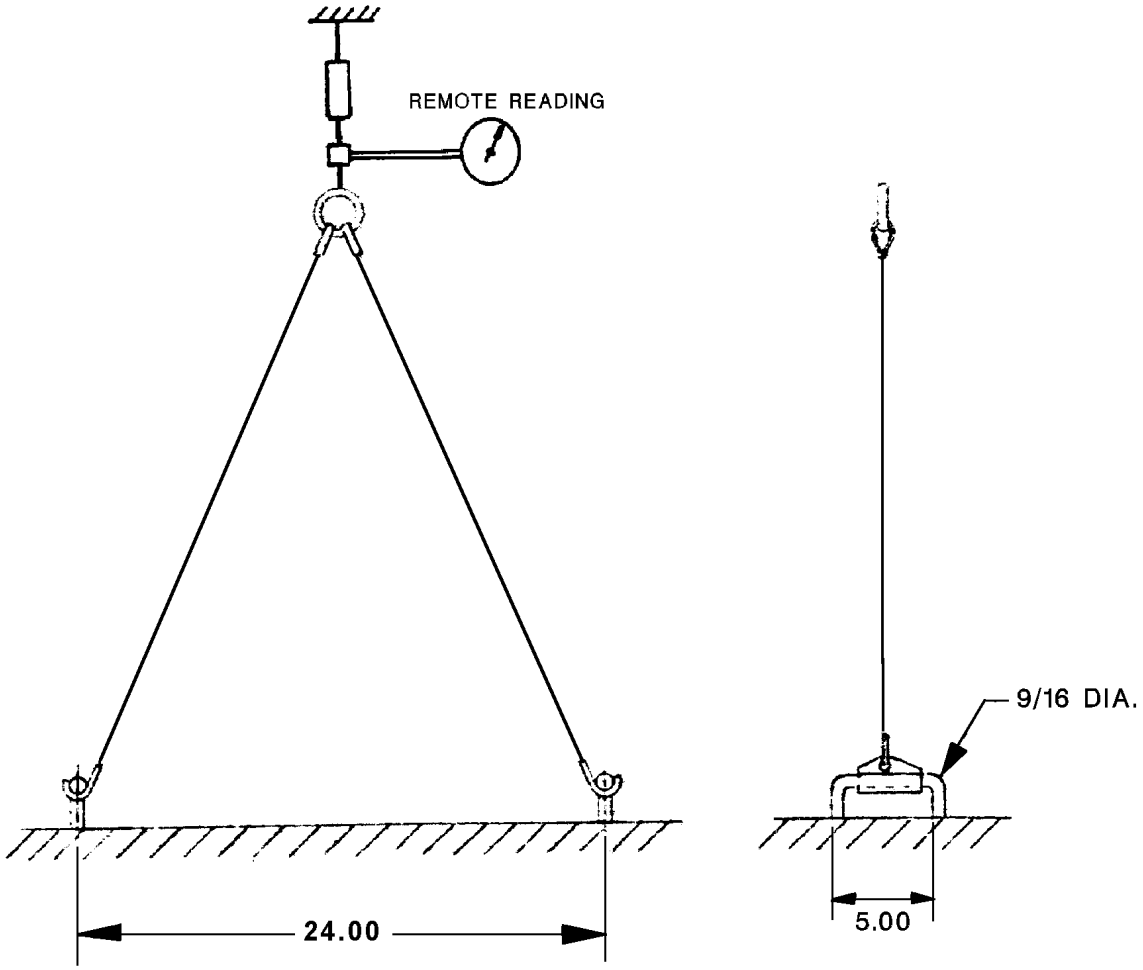

FIGURE 4-177. Test Arrangement, Harness Assembly Torpedo Mounted Dispenser

HARNESS ASSEMBLY CONTAINER
MK 594
NAVSEA DRAWING 3246022
NSN 9Z 3940-01-048-4043

SWL	TEST LOAD	TEST DURATION
400 POUNDS	800 POUNDS	2 MINUTES

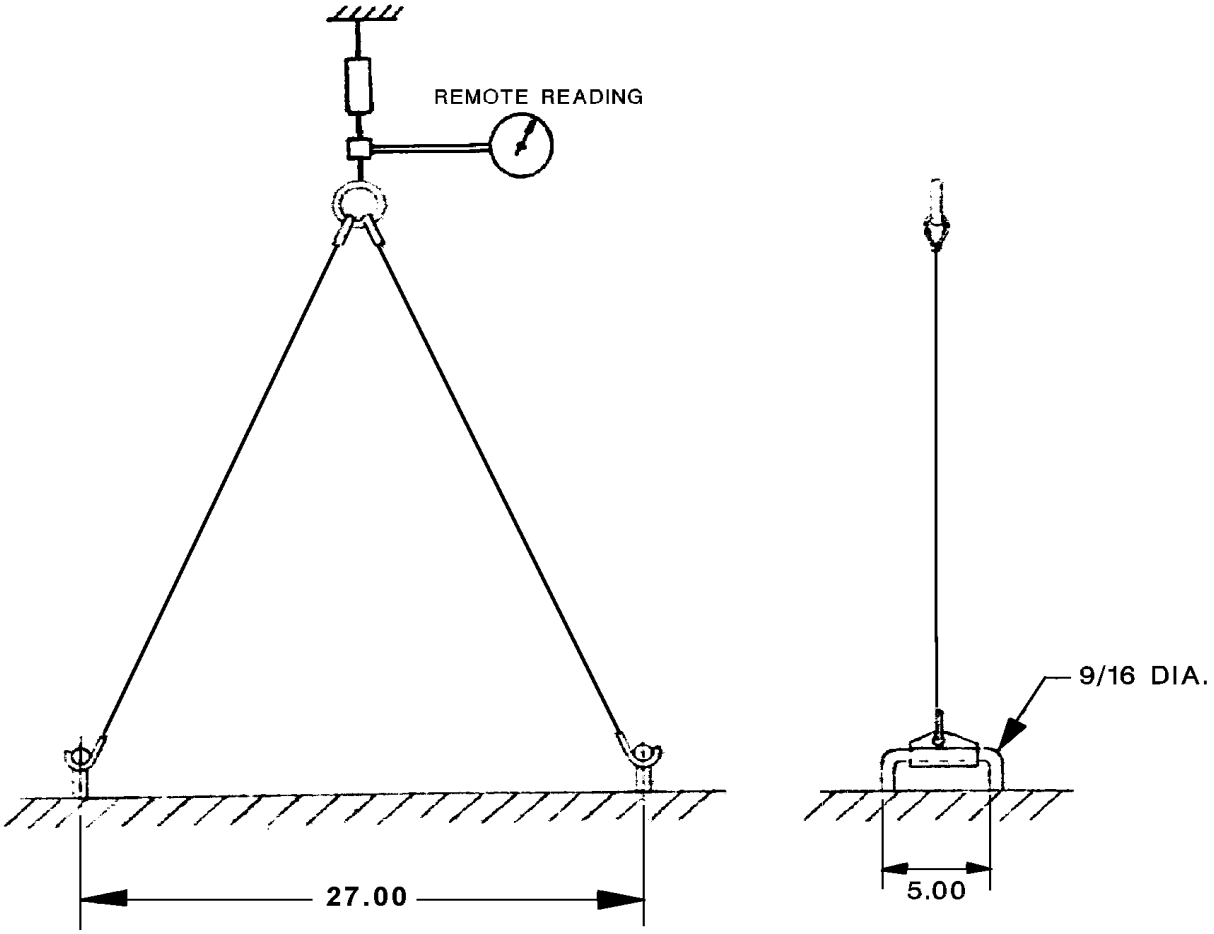

FIGURE 4-178. Test Arrangement, Harness Assembly Container Mk 594

This page left intentionally blank

For a Microsoft Word Format of
the Site Inspection Checklist
Please click anywhere on this title

APPENDIX A

NAVY PERIODIC WEIGHT TEST CERTIFICATION PROGRAM FOR ORDNANCE HANDLING EQUIPMENT TEST FACILITIES

NAVY PERIODIC WEIGHT TEST CERTIFICATION PROGRAM FOR ORDNANCE HANDLING EQUIPMENT TEST FACILITIES

TABLE OF CONTENTS

SECTIONPAGE

I PURPOSE A-3

II SCOPE A-3

III ACTIONS A-3

IV RESPONSIBILITIES

SELF-CERTIFICATION PROCESS A-4

SITE CERTIFICATION PROCESS A-5

V CERTIFICATION PROCESS (OUTLINE) A-6

VI SITE INSPECTION CHECKLIST A-10

A ADDENDUM A, WEAPONS PECULIAR OR LOCALLY MANUFACTURED HANDLING EQUIPMENT LOAD TEST REQUIREMENTS A-20

B ADDENDUM B, OPERATOR CERTIFICATION REQUIREMENTS A-21

NAVY PERIODIC WEIGHT TEST CERTIFICATION PROGRAM FOR ORDNANCE HANDLING EQUIPMENT TEST FACILITIES

SECTION I - PURPOSE

To establish a Department of Navy (DON) standard program for the certification of facilities ashore or afloat to perform periodic weight testing of portable ordnance handling equipment (OHE), as identified in NAVSEA OP 2173 and in accordance with the requirements of NAVSEA SG420-AP-MMA-010 and NAVAIR 17-1-127, and to maintain a comprehensive data base of certified facilities and their capabilities.

SECTION II - SCOPE

This certification program is applicable to all facilities that perform periodic weight testing of DON portable OHE identified in NAVSEA OP 2173.

SECTION III - ACTIONS

A. Navy Type Commanders (TYCOMs), COMNAVAIRRESFOR, COMMARSYSCOM, CNET, NAVSEA and NAVAIR, as appropriate, shall:

a. Ensure that their activities have their OHE weight tested at certified facilities using testing arrangements and test fixtures that comply with current DON policy. DON units that are tenants at non-DON activities shall develop an Inter-Service Support Agreement (ISSA) to ensure that the OHE is tested in accordance with NAVSEA SG420-AP-MMA-010 or NAVAIR 17-1-127.

b. Ensure that these facilities have:

(1) been self-certified through this program,

(2) been certified by the Naval Packaging, Handling, Storage and Transportation (PHST) Center, Naval Surface Warfare Center Indian Head Division (NAVSURFWARCEN), Detachment Earle (Code 71), or

(3) ceased performing weight testing.

c. Endorse all self-certification or site certification processes.

d. Forward the names, addresses, points of contact and the facility capabilities to the Naval PHST Center, NAVSURFWARCEN Det Earle, (Code 71), Colts Neck, NJ 07722-5023.

NAVY PERIODIC WEIGHT TEST CERTIFICATION PROGRAM FOR ORDNANCE HANDLING EQUIPMENT TEST FACILITIES

SECTION III - ACTIONS (continued)

B. Activities seeking certification of their weight testing facility:

a. Review the scope and objectives for the weight test certification process.

b. Determine OHE candidates for testing. (Emphasis on most common items tested at site).

c. Identify limitations (e.g., NAVSEA OHE not compatible with test stand nor NAVAIR OHE with test tower, limited test fixtures).

NOTE: At this point, a determination can be made by the testing activity as to whether or not they meet the requirements of this certification program.

d. Forward request for self-certification or site certification to TYCOM.

SECTION IV - RESPONSIBILITIES

A. SELF-CERTIFICATION PROCESS:

The responsible party for all authorized actions used throughout this certification program is the Commanding Officer/Officer-In-Charge (CO/OIC). The CO/OIC may delegate authority to the lowest level of competence commensurate with the subordinate's assigned responsibilities and capabilities in accordance with OPNAVINST 3120.32 (series). For the self-certification process, the CO/OIC delegated authority may sign the inspector's signature on the site inspection checklist, however, the CO/OIC shall have the ultimate responsibility of authorizing the actual self-certification process and shall forward approval letter to the Naval PHST Center.

(1) Activities performing self-certification shall:

a. Ensure test personnel are properly trained and knowledgeable with local instruction, test manuals, etc., which govern testing of OHE.

b. Conduct actual inspection (review publications, drawings, test fixtures, personnel qualifications, etc., and witness actual weight testing procedures) in accordance with the enclosed Site Inspection Checklist.

c. Maintain certifications for personnel and equipment, once site approval is accomplished.

NAVY PERIODIC WEIGHT TEST CERTIFICATION PROGRAM FOR ORDNANCE HANDLING EQUIPMENT TEST FACILITIES

SECTION IV - RESPONSIBILITIES (continued)

d. Forward certification letter, along with the completed Site Inspection Checklist, to Naval PHST Center with a copy to appropriate TYCOMs.

e. Forward any changes in test facility capabilities to Naval PHST Center and appropriate TYCOMs at least annually.

(2) Naval PHST Center shall:

a. Update, maintain and distribute to ALCON, annually a listing of all certified weight testing facilities and their testing capabilities.

b. Provide continued technical support and ensure that certified testing activities are on applicable technical documentation distribution lists.

B. SITE CERTIFICATION PROCESS:

(1) Activities requesting site certification shall:

a. Ensure test personnel are properly trained and knowledgeable with local instructions, test manuals, etc., which govern testing of OHE.

b. Contact the Naval PHST Center, DSN 449-2843, Commercial (732) 866-2843 for cost estimate and scheduling.

c. Provide funding to Naval PHST Center for site certification, via NAVCOMP Form 2275.

d. Maintain certifications for personnel and equipment, once site approval is accomplished.

(2) Naval PHST Center (performing site certification) shall:

a. Provide cost estimate and schedule for facilities requesting site certification.

NAVY PERIODIC WEIGHT TEST CERTIFICATION PROGRAM FOR ORDNANCE HANDLING EQUIPMENT TEST FACILITIES

SECTION IV - RESPONSIBILITIES (continued)

b. Provide technical documentation requirements.

c. Conduct actual inspection (review publications, drawings, test fixtures, personnel qualifications, etc. and witness actual weight testing procedures).

d. Brief applicable personnel to discuss results of findings.

e. Forward certification letter, along with Site Inspection Checklist, to testing activity with a copy to appropriate TYCOMs.

f. Update, maintain and distribute to ALCON, via message semi-annually, a listing of all certified weight testing facilities and their testing capabilities (by weapon systems).

g. Provide continued technical support and ensure that certified testing activities are on applicable technical documentation distribution lists.

SECTION V - CERTIFICATION PROCESS (OUTLINE)

1. Facility Conditions/Operations

a. Test Mode (Tower, Test Stand, Crane with Dynamometer, etc.)

b. Work Area (adequate space, safety protection equipment, machine guards, etc.)

2. Record Keeping

a. Review test log book (Ensure that the following information is recorded for all OHE: test date, serial number, NSN, nomenclature, test load and operator’s name).

3. Technical Documentation

a. Weight Test Manuals (NAVSEA SG420-AP-MMA-010/NAVAIR 17-1-127)

b. Drawings (test fixture drawings provided to each site for NAVSEA OHE).

NAVY PERIODIC WEIGHT TEST CERTIFICATION PROGRAM FOR ORDNANCE HANDLING EQUIPMENT TEST FACILITIES

SECTION V - CERTIFICATION PROCESS (OUTLINE) (continued)

c. OHE Maintenance Index Pages (MIPs) including associated Maintenance Requirement Cards (MRCs).

d. Special Documents [e.g., local written operating procedures, personnel qualifications and training plans; non-destructive testing (NDT) procedures, etc.]

4. Test Fixtures

a. Properly identified, controlled and available.

b. Recommended/alternate test fixtures; source document for alternates.

5. Site Test Demonstrations (select 6 different multi-purpose OHE plus additional tests required for weapons peculiar and locally manufactured OHE, if applicable).

a. Review visual inspection and testing procedures.

b. Review test arrangements (including fixture installation).

c. Conduct complete inspection and testing cycle for OHE candidates.

d. Validate actual tests.

6. OHE Markings

a. Test tag.

(1) Information (test facility, test expiration date, SWL)

(2) Marking methods (stenciling, etching, engraving, etc.)

b. Identification Tags (as applicable)

(1) Information (nomenclature, part number, SWL)

(2) Marking Methods (stenciling, etching, engraving, etc.)

c. Standardization record format.

NAVY PERIODIC WEIGHT TEST CERTIFICATION PROGRAM FOR ORDNANCE HANDLING EQUIPMENT TEST FACILITIES

SECTION V - CERTIFICATION PROCESS (OUTLINE) (continued)

d. Local control/serial numbers/codes (as required).

7. QA Check Point

a. Adequate environmental controls.

b. Personnel and personal protection during inspections and testing.

c. Designated storage/stowage areas.

d. Nonconformance/unserviceable equipment, identification, segregation and storage/stowage controls.

e. Maintain inventory control of equipment pending test and tests completed.

8. Inspection Results (PHST Center Site Certification only)

a. Brief with the testing department personnel.

b. Brief with CO/OIC, as required.

9. Report Results

a. For self-certification: testing activity completes Site Inspection Checklist with inspector's recommendations and signature.

b. For site certification: Naval PHST Center completes Site Inspection Checklist with inspector's recommendations and signature.

10. Formal Certification Letter

a. For self certification, the testing activity's CO/OIC forwards official certification letter, with completed Site Inspection Checklist, to Naval PHST Center with a copy to appropriate TYCOMs.

b. The Naval PHST Center, as directed by NAVORDCEN, initiates and forwards official certification letter, with completed Site Inspection Checklist, to test activity with a copy to appropriate TYCOMs.

NAVY PERIODIC WEIGHT TEST CERTIFICATION PROGRAM FOR ORDNANCE HANDLING EQUIPMENT TEST FACILITIES

SECTION V - CERTIFICATION PROCESS (OUTLINE) (continued)

11. Certified Facilities

a. The Naval PHST Center's web site http://www.ih.navy.mil/phst/phst.htm has been established to facilitate submittal of OHE test facility self-certification checklists, and verification of facilities certified and listed by the Naval PHST Center to perform OHE weight testing.

12. Revocation and Reinstatement

Certification shall be indefinite unless revoked by the CO/OIC. Revocation shall remain in effect until the testing facility has successfully completed this certification program.

NAVY PERIODIC WEIGHT TEST CERTIFICATION PROGRAM FOR ORDNANCE HANDLING EQUIPMENT TEST FACILITIES

SECTION VI - SITE INSPECTION CHECKLIST

(For Self-Certification or PHST Center Site Certification)

IMPORTANT: Click on Hand Button on Toolbar to be able to check boxes. You CANNOT save this file with Reader, only with Exchange. PRINT BEFORE YOU EXIT.

Name of Activity:

Address:

Date: _____Ashore _____ Afloat _____
(UIC) (Ship Hull No.)

1. SAFETY REVIEW:

References: NAVSEA OP 4 - Ammunition Afloat

NAVSEA OP 5 - Ammunition And Explosives Ashore: Safety Regulations For Handling, Storing, Production, Renovation And Shipping
NAVSEA SG420-AP-MMA-010 - Periodic Testing Arrangements For Ordnance Handling Equipment
NAVAIR 17-1-127 - Periodic Proofload Testing Of Weapons Support Equipment
NAVSEA OP 2173 - Approved Handling Equipment For Weapons And Explosives
ANSI Z358.1 - Emergency Eyewash And Shower Equipment

	Yes	No
a. Are signs properly posted to identify hazard areas (e.g., eye, noise, foot, etc.)?	☐	☐
b. Is the area free from hazardous materials not required for the testing/inspection process?	☐	☐
c. Is the work area of an adequate size to safely perform the testing/inspection process?	☐	☐
d. Are eye wash/showers provided for personnel working with hazardous materials?	☐	☐
(1) Are eye wash/showers properly identified by signs?	☐	☐

NAVY PERIODIC WEIGHT TEST CERTIFICATION PROGRAM FOR ORDNANCE HANDLING EQUIPMENT TEST FACILITIES

SECTION VI - SITE INSPECTION CHECKLIST (continued)

	Yes	No
(2) Are they easily accessible and not blocked by equipment or debris?	☐	☐
(3) Are eye wash/showers maintained per ANSI Z358.1?	☐	☐
(4) Is a log maintained?	☐	☐
e. Is a hazardous material list kept for chemicals?	☐	☐
f. Are material safety data sheets (MSDS) available to personnel?	☐	☐
g. Is ventilation adequate for the types of chemicals used?	☐	☐
h. Are warning signs/flashing lights or other systems used to secure areas during testing?	☐	☐
i. Are machine guards, protective shields or safety booths provided?	☐	☐
j. Are they properly installed and functioning?	☐	☐
k. Is there an effective Energy Control (electrical circuit/ machine lock out) tag out procedure for servicing equipment?	☐	☐
l. Is there a fire extinguisher(s) in the work area?	☐	☐
(1) Is the fire extinguisher(s) readily available, properly inspected and maintained?	☐	☐
(2) Is the fire extinguisher(s) easily located visually or identified by signs?	☐	☐
m. Is there a phone in the area with emergency numbers readily available? **Note: A hand held two-way radio is acceptable.**	☐	☐

NAVY PERIODIC WEIGHT TEST CERTIFICATION PROGRAM FOR ORDNANCE HANDLING EQUIPMENT TEST FACILITIES

SECTION VI - SITE INSPECTION CHECKLIST (continued)

	Yes	No
n. Is there a first aid kit available or medical facility/ service in the vicinity?	☐	☐
o. Is personal protective equipment (PPE) available and worn by the operators?	☐	☐
i.e., Gloves	☐	☐
Hard Hats (non-metallic), as applicable	☐	☐
Safety Shoes	☐	☐
Hearing protection, as required	☐	☐
Safety glasses/face shield	☐	☐
Respirators, as required	☐	☐

2. WEIGHT TEST APPARATUS:

a. Test Apparatus: Serial Number _____
Tower ____ Crane ____ Portable unit ____
Overhead hoist ____ Vertical ____ Horizontal ____
Forklift ____ Other _____

(1) Max. Capacity _____
(2) Certification Date _____
(3) Dynamometers/Scales/Indicators (Quantity) _____
Calibration date of each unit _____, _____, _____, _____

b. Test Apparatus: Serial Number _____
Tower ____ Crane ____ Portable unit ____
Overhead hoist ____ Vertical ____ Horizontal ____
Forklift ____ Other _____

(1) Max. Capacity _____
(2) Certification Date _____
(3) Dynamometers/Scales/Indicators (Quantity) _____
Calibration date of each unit _____, _____, _____, _____

NAVY PERIODIC WEIGHT TEST CERTIFICATION PROGRAM FOR ORDNANCE HANDLING EQUIPMENT TEST FACILITIES

SECTION VI - SITE INSPECTION CHECKLIST (continued)

c. Test Apparatus: Serial Number _____
Tower ____ Crane ____ Portable unit ____
Overhead hoist ____ Vertical ____ Horizontal ____
Forklift ____ Other _____

(1) Max. Capacity _____
(2) Certification Date _____
(3) Dynamometers/Scales/Indicators (Quantity) _____
Calibration date of each unit _____, _____, _____, _____

3. OPERATOR PERSONNEL QUALIFICATIONS:

Complete Addendum B sheet(s) with the following information:

a. Operator Number Certifications Requirements:

(1) Test Operator Name:

(2) Test Equipment Certified to Operate

(3) Training/Certification Source Document

(4) Certification Date in Effect:

b. Review training course (or individual training requirements as applicable) for formal training criteria and on the job training (OJT) requirements.

Note: An OJT period must be defined in the formal course structure.

	Yes	No
4. TEST LOG/RECORD BOOK:		
a. Is a log/record book kept per:		
(1) NAVSEA SG420-AP-MMA-010?	☐	☐
(2) NAVAIR 17-1-127?	☐	☐
b. Is it current with the latest test date?	☐	☐

NAVY PERIODIC WEIGHT TEST CERTIFICATION PROGRAM FOR ORDNANCE HANDLING EQUIPMENT TEST FACILITIES

SECTION VI - SITE INSPECTION CHECKLIST (continued)

	Yes	No
c. Does it contain the following information?		
(1) Item Serial Number, NSN, Nomenclature, Test Load, Operator's Name, and Date	☐	☐
(2) Test and inspection number or MRC number	☐	☐
5. TECHNICAL DOCUMENTATION:		
Does the test activity have a current copy of the following documents?		
a. NAVSEA SG420-AP-MMA-010	☐	☐
b. NAVAIR 17-1-127	☐	☐
c. Applicable drawings for test fixtures	☐	☐
d. Special documents:		
(1) Written Operating Procedures for equipment and processes	☐	☐
(2) Certified Non-Destructive Testing (NDT) procedures (as required)	☐	☐
(3) Site Work Packages (MRC cards, inspection test criteria, shop travelers, etc.)	☐	☐
(4) Weapon peculiar or locally developed equipment certifications and support documentation	☐	☐
6. TEST FIXTURES:		
a. Does the test activity have test fixtures for the following "Multi-Purpose" OHE?:		

NAVY PERIODIC WEIGHT TEST CERTIFICATION PROGRAM FOR ORDNANCE HANDLING EQUIPMENT TEST FACILITIES

SECTION VI - SITE INSPECTION CHECKLIST (continued)

	Yes	No
(1) Mandrels (1.5 inch radius for pallet slings)	☐	☐
(2) Hook (to interface for hoisting slings)	☐	☐
(3) Multi-Purpose Fixture (NAVSEA Drawing 6213365)	☐	☐
(4) Mk 5 Mod 1 Heavy Lift STREAM Cargo (GULLWING) Strongback	☐	☐

7. WEAPONS PECULIAR TEST FIXTURES:

Note: Weapons peculiar test fixtures are not required for all facilities. These special test fixtures are only required to support the actual testing arrangement.

a. TOMAHAWK Missile Fixtures:

(1) Adapter, Lifting CLS Test Plate (NWSE Drawing 10502)	☐	☐
(2) Gas Generator Lifting Device (JCM -17769 Drawing)	☐	☐

b. STANDARD Missile Fixtures:

(1) Mk 4 Mod 2 Hoisting Beam (simulates forward shoe) (NAVSEA Drawing 5167158)	☐	☐
(2) Mk 5 Mod 2 Hoisting Beam (simulates aft shoe) (NAVSEA Drawing 5167159)	☐	☐
(3) STREAM Adapter, Mk 6 and Mk 30 Mods Dolly (NAVSEA Drawing 5166612)	☐	☐
(4) Rail, Mk 6 and Mk 30 Mods Dolly (NWHC Drawing 7881)	☐	☐

NAVY PERIODIC WEIGHT TEST CERTIFICATION PROGRAM FOR ORDNANCE HANDLING EQUIPMENT TEST FACILITIES

SECTION VI - SITE INSPECTION CHECKLIST (continued)

	Yes	No
(5) Spider Carrier, Mk 60 and Mk 61 Mod 0 (NAVSEA Drawing 6213000) (For STANDARD Missile workshops only)	☐	☐
c. HARPOON Missile Fixtures:		
(1) Mk 32 through Mk 38 Mod 0, Mk 37 Mod 1 Lift Beam (NAVSEA Drawing 5166534)	☐	☐
(2) Multiple Beam (NAVSEA Drawing 5166708-11)	☐	☐
d. Vertical Launch ASROC (VLA) Missile Fixtures:		
(1) Mk 27 Mod 0 Lower Airframe Handling Fixture (NAVSEA Drawings 6212950 and 6212951)	☐	☐
(2) Mk 28 Mod 0 Upper Airframe Handling Fixture (NAVSEA Drawing 6212956)	☐	☐
(3) Mk 29 Mod 0 Thrust Vector Control (TVC) Handling Fixture (NAVSEA Drawing 6212961)	☐	☐
(4) Mk 51 Mod 0 Beam (NAVSEA Drawing 6212963)	☐	☐
e. Vertical Launching System (VLS) Missile Fixture		
(1) Mk 166 Mod 0 Sill Lift Adapter (NAVSEA Drawing 6213007)	☐	☐
(2) Mk 50 Mod 0 Adapter Lift Canister Beam (NAVSEA Drawing 6213813)	☐	☐
(3) Mk 23 Mod 0 Tilt Fixture (NAVSEA Drawing 6212577)	☐	☐

NAVY PERIODIC WEIGHT TEST CERTIFICATION PROGRAM FOR ORDNANCE HANDLING EQUIPMENT TEST FACILITIES

SECTION VI - SITE INSPECTION CHECKLIST (continued)

	Yes	No
(4) Mk 25 Mod 0 Tilt Fixture (NAVSEA Drawing 6213559)	☐	☐
a. Steady Rest (NAVSEA Drawing 6213459)	☐	☐
b. Pivot Fixture (NAVSEA Drawing 6213476)	☐	☐
c. Beam Weldment (NAVSEA Drawing 6213505)	☐	☐
d. Hydraulic Control Cart (NAVSEA Drawing 6213545)	☐	☐
e. Pivot Fixture Brake (NAVSEA Drawing 6213534)	☐	☐
(5) Mk 3 Mod 0 Horizontal Transfer Assembly Strongback		
(a) Upper - (NAVSEA Drawing 6213038)	☐	☐
(b) Lower - (NAVSEA Drawing 6213039)	☐	☐
(6) Mk 4 Mod 0 Vertical Assembly Strongback (NAVSEA Drawing 6213003)	☐	☐
f. Undersea Weapons: (8” to 28” diameter mandrels)	☐	☐
g. NAVAIR unique fixtures (See NAVAIR 17-1-127)	☐	☐

8. LOCALLY MANUFACTURED TEST FIXTURES:

Note: Activities may design and develop their own test fixtures to replace the recommended test fixtures detailed in NAVSEA SG420-AP-MMA-010 or NAVAIR 17-1-127, provided that they are able to withstand the prescribed test loads. However, if the suggested test fixture is used, any deviations to the fixture must be submitted to the Naval PHST Center (for NAVSEA fixtures) or NAVAIR (for NAVAIR fixtures) for approval.

NAVY PERIODIC WEIGHT TEST CERTIFICATION PROGRAM FOR ORDNANCE HANDLING EQUIPMENT TEST FACILITIES

SECTION VI - SITE INSPECTION CHECKLIST (continued)

	Yes	No
a. Are they certified by the PHST Center, NAVAIR, or local Safety/QA representatives?	☐	☐
b. Are drawings available and certifications provided?	☐	☐
c. Are prior to use inspection criteria defined?	☐	☐

9. FACILITY VALIDATIONS:

Perform six different inspections and weight tests/configurations for multi-purpose OHE. Additional tests will be required, using Addendum A, for weapons peculiar and locally manufactured OHE.

TEST NO.	DESCRIPTION NOMENCLATURE	INSPECTION PROCEDURES	SET-UP CONFIG.	VALIDATE TESTING
1.	_____	_____	_____	_____
2.	_____	_____	_____	_____
3.	_____	_____	_____	_____
4.	_____	_____	_____	_____
5.	_____	_____	_____	_____
6.	_____	_____	_____	_____

10. MARKING OF EQUIPMENT:

a. Test Tags Used: Plastic ☐ ID Plate ☐ *Other _____

***Brass sling tag (wire rope slings only) requires forming die (see drawing 2644346).**

b. Test Tag Information:
Test Facility/Test Expiration Date/SWL: Yes ☐ No ☐

NAVY PERIODIC WEIGHT TEST CERTIFICATION PROGRAM FOR ORDNANCE HANDLING EQUIPMENT TEST FACILITIES

SECTION VI - SITE INSPECTION CHECKLIST (continued)

c. Method of marking tag/commodity:
Stenciled ☐ Etched ☐ Engraved ☐ Stamped ☐ Other _____

11. QUALITY ASSURANCE VERIFICATION OF SYSTEM:

	Yes	No
a. QAR designated, in writing, by CO/OIC (Military only)	☐	☐
b. Validation of inspection procedures	☐	☐
c. Validation of test load	☐	☐
d. Signature approval for OHE release	☐	☐

12. INSPECTION OUTBRIEF (PHST Center Site Certification Only)

a. With Testing Department Personnel?	☐	☐
b. With Activity's CO/OIC (as required)?	☐	☐

ADDITIONAL REMARKS:
_____
_____

SUMMARY/CONCLUSIONS: _____
_____
_____

13. INSPECTED BY: _____ DATE: _____

14. SITE APPROVAL/DISAPPROVAL (to be completed by the Inspector): Based on the above Site Inspection Checklist and Documentation, _____
(ship/shore name)

IS RECOMMENDED ☐

IS NOT RECOMMENDED ☐

as a Certified Weight Test Facility.

NAVY PERIODIC WEIGHT TEST CERTIFICATION PROGRAM FOR ORDNANCE HANDLING EQUIPMENT TEST FACILITIES

ADDENDUM A - WEAPONS PECULIAR OR LOCALLY MANUFACTURED HANDLING EQUIPMENT LOAD TEST REQUIREMENTS

TEST NO.	DESCRIPTION NOMENCLATURE	INSPECTION PROCEDURES	SET-UP CONFIG.	VALIDATE TESTING
1.	_____	_____	_____	_____
2.	_____	_____	_____	_____
3.	_____	_____	_____	_____
4.	_____	_____	_____	_____
5.	_____	_____	_____	_____
6.	_____	_____	_____	_____
7.	_____	_____	_____	_____
8.	_____	_____	_____	_____
9.	_____	_____	_____	_____
10.	_____	_____	_____	_____
11.	_____	_____	_____	_____
12.	_____	_____	_____	_____

_____ _____

(INSPECTOR'S NAME) (DATE)

ADDENDUM B - OPERATOR CERTIFICATION REQUIREMENTS

A. Complete the following certification requirements for each operator:

TEST OPERATOR NAME	TEST EQUIPMENT CERTIFIED TO OPERATE	TRAINING/CERTIFICATION SOURCE DOCUMENT	CERTIFICATION DATE IN EFFECT

B. Review training course (or individual training requirements as applicable) for format training criteria and on the job training (OJT) requirements.

NOTE: An OJT period must be defined in the formal course structure

This page left intentionally blank

IF YOU WOULD LIKE TO FILL THIS FORM ONLINE PLEASE CLICK ANYWHERE ON THIS TITLE

Ref: NAVSEAINST 4160.3A

(Insert Classification of TMDER Here) CLASSIFICATION NAVSEA S0005-AA-GYD-030/TMMP

NAVSEA/SPAWAR TECHNICAL MANUAL DEFICIENCY/EVALUATION REPORT (TMDER)

INSTRUCTION: Continue on 8 1/2" x 11" paper if additional space is needed.

1. USE THIS REPORT TO INDICATE DEFICIENCIES, PROBLEMS, AND RECOMMENDATIONS RELATION TO PUBLICATIONS.
2. FOR CLASSIFIED TMDERS, SEE OPNAVINST 5510H FOR MAILING CLASSIFIED TMDERS.

1. PUB NO.	2. VOL/PART	3. REV. NO./DATE OR TM CH. NO./DATE	4. SYSTEM/EQUIPMENT IDENTIFICATION
NAVSEA SG420-AP-MMA-010		**2nd Revision/ 1 APRIL 2000**	

5. TITLE	6. REPORT CONTROL NUMBER
AMMUNITION AND EXPLOSIVES SAFETY AFLOAT	

7. RECOMMENDED CHANGES TO PUBLICATION

PAGE NO. A	PARA-GRAPH B	C. RECOMMENDED CHANGES AND REASONS

8. ORIGINATOR'S NAME AND WORK CENTER (Please Print)	9. DATE	10. DSN/COMM NO.	11. TRANSMITTED TO

12. SHIP HULL NO. AND/OR STATION ADDRESS (Do Not Abbreviate)

NAVSEA 4160/1 (REV 8-95)(Destroy Old Stock)

PLEASE CLOSE WITH TAPE - DO NOT STAPLE - THANK YOU

FOLD HERE

DEPARTMENT OF THE NAVY

==========

Official Business

COMMANDER
NSDSA CODE 5B00
NAVSURFWARCENDIV
4363 MISSILE WAY
PORT HUENEME, CA 93043-4307

FOLD HERE

Operation Tips:

Hypertext Links are distinguished by the color blue. When positioned on a link, the mouse pointer will change shape to a hand pointing with the index finger. A single click will execute the link.

To backtrack your steps through the document, use the double arrow buttons on the tool bar. The left arrows move backwards. The right arrows move forwards.

Find utility is the large binocular button on the tool bar. The find is limited to the part of the document that is currently open.

Search utility is the small binocular over a page button on the tool bar. The search utility will search the entire text of the document. A results window will show which parts of the document that have hits. The files are listed in order of percentage of hits to the size of text, not the number of hits in a file. The pie chart over a page button on the tool bar will pop up the search results window. The button with a page and an arrow will take you to the next hit. Left arrow moves to the previous hit. Right arrow moves to the next hit. The search utility is only available in the Arcobat Reader with Search version. If the version of Acrobat Reader you have installed does not have the search utility, uninstall the Acrobat Reader and run the ESTDC CD-ROM installation again. Reference Search Tips below for more details.

To copy text from Acrobat, click on the abc button located on the tool bar. This will change the cursor from a hand to line. Now you will be able to highlight text and copy it to the clipboard and then paste it into other applications.

TMDRS can be populated electronically using the Acrobat Reader. The user types the information on the TMDR form and then prints that page. This information can be saved by using File->Save As... from the menu bar. You must save the file to a drive other than the CD-ROM.

Printing Reference Documents:

Select Shrink to Fit option on the bottom of the Print Window. This will insure that the document will fit on the page. Some images scanned into Acrobat as the wrong size. If the paper size shows greater than 8.5 x 11, you must choose this option for the page to print without information being truncated.

Search Tips:

Searching for a NSN.

The FSC and NIIN which make up the NSN are on separate lines. To find the item you are looking for it is suggested you search for only the NIIN. The NIIN is the last 9 digits of the NSN.

Searching for a NIIN.

You must include the dashes in the search string (ex. 01-234-5678).

Searching for a numeric NALC.

You most likely will receive many hits for this search. The SW020 table file is split into multiple PDF files. They are named SW020 Text and the range NALCs of each section of table 3-1. View the item where your NALC falls within the range (letters precede numbers).

Searching for character strings.

When searching for a character string, it is recommended to use wildcards around it. For example, it is recommended you do the following when looking for the MJU-8 decoy flare.

If you use the search the string ***MJU-8***, you may find everything containing the string MJU-8. Some times Acrobat Search will hit on all occurrences of MJU-8 in the text, other times it won't. To ensure you hit on all occurrences of MJU-8, surround it with wildcards using the search string ****MJU-8****.

POINTS OF CONTACT:

Installation/Operation of CD-ROM: Greg Faczak
COM (732) 866-2949, DSN 449-2949
email: faczakgj@phst.navy.mil

Technical Data Inquiries: for NAVSEA OP3565 (HERO Manual),
NAVSEA SW020-AC-SAF-010,
NAVSEA OP5 Volume 1 (Explosive Safety Ashore),
Truckloads, Railcar, and Unit Loads Index

Jeri DiMaggio
COM (732) 866-2976
DSN 449-2976
email: dimaggiojj@phst.navy.mil

for NAVSEA S9571-AA-MMA-010 (UNREP Manual)
NAVSEA OP 4 (Explosive Safety Afloat),
NAVSEA SW023-AH-WHM-010 (MHE Manual)

Mike Kraynick
COM (732) 866-2924
DSN 449-2924
email: kraynickmt@phst.navy.mil

for NAVSEA SW020-AF-ABK-010
(Drivers and Inspectors Manual)
NAVSEA SW020-AG-SAF-010
(Transportation Safety Handbook)

Dawn Lauer
COM (732) 866-2980
DSN 449-2980
email: lauerdm@phst.navy.mil

for NAVSEA SG420-AP-MMA-010 (Periodic Test)

Julia Coiner
COM (732) 866-2834
DSN 449-2834
email: coinerjm@phst.navy.mil

Request for Distribution: Julia Coiner
COM (732) 866-2834
DSN 449-2834
email: coinerjm@phst.navy.mil